Traxion®

SAFETY FOR MOBILITY

DESIGNER, MANUFACTURER, DISTRIBUTOR OF **COUPLING SOLUTIONS** AND **UNDER-RUN PROTECTION**

INNOVATION

SAFETY

EFFICIENCY

serving professional vehicles

COUPLINGS

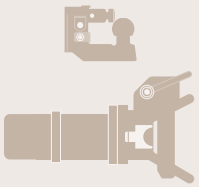

TOWBEAMS



TOWBEAMS LIGHT & MEDIUM

UNDER-RUN PROTECTION

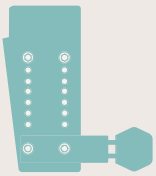

DRAWBAR EYES

FIFTH WHEELS



Traxion®

SAFETY FOR MOBILITY

A NEW approach to the trade...

We design, manufacture and distribute innovative coupling solutions and under-run protection bars for professional vehicles: LCVs, rigids and trailers. A business that makes us proud of everything we bring to the trade...

Dare to be different, succeed for the long term! Since entering the market in 2011, we have quickly established ourselves as a key player in couplings and rear protection for professional vehicles.

Venturing off the beaten track so that everything runs smoothly on the road! Our innovative technical solutions appeal to major accounts and SMEs alike, who see them as devices that are safe, easy to install and flexible to use.

Ensuring the safety of users and of everyone who crosses their path. Praised for their quality, their robustness and their many functions, the products we design, manufacture and distribute are approved and meet the most demanding safety standards.

Anticipating tomorrow's needs. Every day, we work to expand our range to meet new regulations and new needs.

SAFETY FOR MOBILITY



OUR BUSINESS

Equipment manufacturer



OUR MISSION

Safety



OUR FIELD OF EXPERTISE

Couplings and rear protection



OUR PLAYING FIELD

Europe

CONTENTS

INDEX 4

COUPLINGS 13

TOWBEAMS 61

LIGHT & MEDIUM TOWBEAMS 81

UNDER-RUN PROTECTION 93

DRAWBAR EYES 135

FIFTH WHEELS 143



INDEX

Codes	Pages
T151 00 03	54
T151 00 04	41/47
T151 00 11	39
T151 00 17	54
T151 00 18	54
T151 00 19	41/47
T152 00 11	45
T152 00 32	41
T152 00 64	43/45/49/57
T152 00 76	43/49/57
T152 00 91	35/37/43/45
T152 01 30	29/32/42/43/48/49/50/52/53/57
T152 01 31	42/43/48/49/50/52/53/57
T152 01 32	42/43/44/45/46/48/49/52/53/57
T152 01 49	49/51
T152 01 65	43
T152 01 73	43/45/57
T152 01 75	43/49/57
T152 01 78	35/37/43/45
T152 01 79	43/45
T152 01 81	35/37/43/45
T152 01 82	49/57
T152 01 83	43/49/57
T152 01 85	43
T152 01 86	35/37/43/49/51
T152 01 87	43/49/51
T152 01 88	43/45
T152 01 89	49/57
T152 01 92	49
T152 01 93	45
T152 01 95	43/49/57
T152 02 16	49/57
T152 02 17	43/49/57
T152 02 19	53
T152 02 27	43
T152 02 28	39/45
T152 02 51	39/45
T152 02 52	39/45
T152 02 54	33
T152 02 55	33
T152 02 56	33
T152 02 57	33
T152 02 58	33
T152 03 03	49/51
T152 03 04	49/51
T152 03 05	49/51
T152 03 06	49/51
T152 03 07	49/51
T152 03 08	49/51
T152 03 09	49/51
T152 03 10	49/51
T152 03 12	49/51
T152 03 13	49/51
T152 03 14	49/51
T152 03 15	49/51
T152 03 23	55
T152 03 25	55
T152 03 26	55
T152 03 27	55
T152 03 31	57
T152 03 32	57
T152 03 33	57
T152 03 34	57
T152 03 35	33/37/57
T152 03 36	57
T152 03 37	57
T152 03 39	57
T152 03 41	57
T152 03 45	57
T152 03 89	31
T152 03 90	31
T152 03 91	31
T152 03 92	31
T152 03 93	31
T152 03 94	31
T152 03 95	31
T152 03 99	31
T152 04 05	31
T152 04 06	47
T152 04 07	47
T152 04 08	47
T152 04 09	47
T152 04 10	47
T152 04 39	55
T152 04 54	35/37
T152 04 55	35/37
T152 04 56	35/37
T152 04 58	35/37
T152 04 59	35
T152 04 60	35/37
T152 04 61	35
T152 04 62	35
T152 04 67	55
T152 04 68	55
T152 04 69	55
T152 04 70	35
T152 04 71	57
T152 04 72	57
T152 04 73	57
T152 04 74	57
T152 04 75	57
T152 04 76	57
T152 04 77	57
T152 04 78	57
T152 04 79	57
T152 04 83	31
T152 04 89	55
T152 04 94	49
T152 04 95	49/51
T152 04 98	49/51
T152 05 06	35/37
T152 05 09	39
T152 05 29	43/45/49/51
T152 05 31	31
T152 05 41	41
T152 05 55	33
T152 05 61	35
T152 06 03	43/45/49/57
T152 06 04	43/45
T152 06 07	43/45
T152 06 09	43/45
T152 06 11	43/45
T152 06 12	45
T152 06 14	43
T152 06 17	43/45/57
T152 06 18	43/45/57
T152 06 19	43/45
T152 06 20	43
T152 06 21	43
T152 06 22	43/45/57
T152 06 25	43/45
T152 06 33	35/37
T152 06 37	35/37
T152 06 38	35/37
T152 06 39	35/37
T152 06 40	37
T152 06 41	37
T152 06 45	34/35/36/37/38/40
T152 06 46	57
T152 06 47	57
T152 06 49	43/45
T152 06 50	59
T152 06 55	35/37
T152 06 56	35/37
T152 06 60	59
T152 06 64	39/45
T152 06 66	39/45
T152 06 67	39/45
T152 06 68	37
T152 06 69	37
T152 06 88	43
T152 06 92	59
T152 06 93	59
T152 06 94	59
T152 06 95	59
T152 06 96	59
T152 06 97	59
T152 06 98	59
T152 07 07	59
T152 07 17	47
T152 07 31	59
T152 07 32	59
T152 07 33	39
T152 07 34	39
T152 07 35	39/45
T152 07 36	39
T152 07 40	35/37
T152 07 55	37
T152 07 67	39
T152 07 68	58
T152 07 70	43
T152 07 71	43
T152 07 72	43
T152 07 73	43
T152 08 04	45
T152 08 05	45
T152 08 06	45
T152 08 07	45
T152 08 08	45
T152 09 98	43
T152 71 00	41
T153 00 04	141
T153 00 14	141
T153 00 16	141
T153 00 17	141
T153 00 24	141
T153 00 25	141
T153 00 35	141
T153 00 46	141
T153 00 58	141
T153 10 41	138/139/141
T154 00 05	147
T154 00 06	147
T154 00 07	147
T154 00 19	147
T154 00 31	147
T154 00 37	147
T154 00 48	147
T154 00 50	145/147/151
T154 00 55	147
T154 00 58	147
T154 00 72	147
T154 00 73	147
T154 00 79	145/147/149
T154 00 83	145/149/151
T154 00 88	151
T154 00 89	147
T154 00 90	147
T154 00 92	145
T154 00 93	145
T154 01 01	145
T154 01 26	149/151
T154 01 29	149/151
T154 01 31	149
T154 01 35	149
T154 01 38	149
T154 01 40	149/151
T154 01 41	149
T154 01 42	149
T154 01 43	149/151
T154 01 47	149
T154 01 49	149
T154 01 52	149
T154 01 53	149
T154 01 54	149
T154 01 55	149
T154 01 56	149
T154 01 57	149
T154 01 59	149/151
T154 01 60	151
T154 01 61	149
T154 01 62	149/151
T154 01 64	149/151
T154 01 66	149/151
T154 01 67	151
T154 01 68	149/151
T154 01 71	153
T154 01 72	153
T154 01 73	153
T154 01 74	153
T154 01 75	153
T154 01 76	153
T154 01 77	153
T154 01 78	153
T154 01 79	153
T154 01 80	153
T154 01 81	153
T154 01 82	153
T154 01 83	153
T154 01 84	153
T154 01 85	153
T154 01 86	153
T154 01 87	153
T154 01 88	153
T154 01 89	153
T154 01 90	153
T154 01 91	153
T154 02 04	155
T154 02 05	155
T154 02 06	155
T154 02 07	155
T154 02 08	155
T154 02 09	155
T154 02 15	154/155
T154 02 27	149
T154 02 38	151
T154 02 39	151
T154 02 40	151
T154 02 41	151
T154 02 42	151
T154 02 43	151
T154 02 44	151
T154 02 71	147
T154 02 72	147
T154 02 73	147
T154 02 74	147
T154 02 75	147
T154 02 76	147
T154 02 77	147
T154 02 78	147
T154 02 83	151
T154 02 84	151
T154 02 85	151
T154 02 86	151
T154 02 87	151
T154 02 89	151
T154 02 90	149/151
T154 03 00	157
T154 03 02	157
T154 03 03	157
T154 03 04	157
T154 03 05	157
T154 03 06	157
T154 03 07	157
T154 03 08	157
T154 03 09	157
T154 03 10	157
T154 03 15	157
T154 03 23	157
T154 03 24	157
T154 03 28	157
T154 03 30	157
T158 01 01	31
T158 01 02	31
T158 01 03	47
T160 75 70	15/17
T160 75 71	17
T160 75 72	15
T160 75 80	17
T160 75 85	17
T205 75 00	18
T210 05 10	52/53/57
T210 05 20	52/53/57
T210 05 30	52/53/57
T220 75 00	14/15
T220 75 40	14/15
T220 76 08	16/17
T220 76 48	16/17
T225 02 50	30/31
T225 02 51	30/31
T225 02 52	30/31
T225 02 53	30/31
T225 02 54	30/31
T238 03 80	32/33
T238 03 81	32/33
T238 03 82	32/33
T238 03 83	32/33
T240 30 10	48/49
T240 30 20	48/49
T240 40 10	48/49
T240 40 20	48/49
T240 60 10	48/49
T240 60 20	48/49
T240 60 90	49
T240 70 10	50
T240 70 20	50

INDEX

Codes	Pages
T240 80 10	50
T240 80 20	50
T250 03 10	42/43/49
T250 03 20	42/43/49
T250 04 10	42/43/49
T250 04 20	42/43/49
T250 25 10	42/43/49
T250 25 20	42/43/49
T250 25 42	46
T250 25 82	44
T268 12 10	35
T268 12 20	34
T268 20 10	34/35
T268 20 20	34/35
T268 20 25	34/35
T268 20 42	40/41/47
T268 20 80	38
T268 50 10	36
T268 50 20	36
T268 50 25	36
T268 53 20	34/35
T268 55 10	36/37
T268 55 20	36/37
T276 15 10	29
T276 15 40	29
T276 57 61	28
T276 63 00	56/57
T276 64 00	56/57
T276 66 00	56/57
T290 11 00	54/55/140
T295 40 00	58
T305 50 20	150
T305 50 35	150
T312 21 50	145
T312 21 85	145
T312 22 18	145
T320 01 50	146/147
T320 01 85	146/147
T320 02 50	146/147
T322 01 90	148/149
T322 02 50	148/149
T325 01 90	148/149
T325 02 50	148/149
T330 00 01	152
T330 00 02	152
T330 00 03	152
T350 00 00	154/155
T350 10 00	154/155
T375 00 00	156/157
T375 10 00	156/157
T380 00 60	144
T380 00 80	144
T380 01 00	144
T380 01 20	144
T380 01 60	144
T440 20 10	139
T440 20 20	139
T440 30 10	139/141
T440 50 15	139/141
T450 20 10	138/141
T450 20 40	58
T450 30 10	138/141
T450 50 15	138/141
T450 50 25	138/141
T468 30 00	136
T468 30 05	136
T468 30 10	136
T468 30 20	136
T468 30 30	136
T468 50 35	137/140/141
T510 20 40	30/31
T520 01 00	140
T520 02 00	140
T520 04 00	140
T520 05 00	140
T520 07 00	140
T520 07 01	141
T520 07 10	141
T520 09 95	55
T520 15 00	30
T520 20 00	30
T520 25 00	30
T520 30 00	30
T520 40 00	30
T520 41 00	41/47
T520 42 00	46/47
T520 42 50	54
T520 50 10	85/87
T520 50 15	94/96
T520 50 25	94/96
T520 50 30	85/87
T520 52 12	98/100/104
T520 52 14	98/100/104/106/110/112/126/128
T520 52 16	98/100/104/106/108/110/112/126/128
T520 52 24	114/116/118/120/122
T520 52 26	114/116/118/120/122/132
T520 52 44	124
T520 52 46	124
T520 54 82	70/72/74/102
T520 54 92	70/72/74/102
T520 54 94	70/72/74/102
T520 54 96	70/72/74/102
T520 75 40	14/16
T520 75 56	14/16/18/28/29/32
T520 75 90	14/16/18
T522 01 40	60
T522 01 50	60
T522 01 68	60
T522 15 50	34
T522 15 80	36
T522 40 50	38/44/76
T524 10 00	86/92
T524 42 80	34/36/38/40/42/44/46
T524 43 00	67
T524 44 00	86/92
T524 44 05	92
T524 44 10	86/92
T524 45 00	86/92
T524 45 20	86/92
T524 47 00	86/92
T524 48 00	15/17/20/22/24/86/92
T524 48 05	67/86/92
T524 62 10	76/77
T524 62 20	76/77
T524 62 50	76/77
T524 62 70	76/77
T524 75 90	14/16
T580 01 05	66
T580 01 06	66
T580 01 08	66
T580 01 16	64/65
T580 01 26	64/65
T580 01 36	64/65
T580 01 46	64/65
T580 01 56	64/65
T580 01 66	64/65
T580 01 76	64/65
T580 02 05	66
T580 02 06	66
T580 02 08	66
T580 04 05	66
T580 04 06	66
T580 04 08	66
T580 05 05	66
T580 05 06	66
T580 05 08	66
T580 06 05	66
T580 06 06	66
T580 06 08	66
T580 07 05	66
T580 07 06	66
T580 07 08	66
T580 11 16	62/63
T580 11 26	62/63
T580 11 36	62/63
T580 11 46	62/63
T580 11 56	62/63
T580 11 66	62/63
T580 11 76	62/63
T580 20 80	34/36
T580 20 90	34/36
T580 21 10	24
T580 21 15	26/27
T580 21 20	20/21
T580 21 25	22/23
T580 21 40	20/21
T580 21 45	22/23
T580 21 60	20/21
T580 21 65	22/23
T580 21 68	26/27
T580 42 01	78/79
T580 42 02	78/79
T580 42 03	78/79
T580 42 04	78/79
T580 42 05	78/79
T580 42 06	78/79
T580 42 07	78/79
T580 42 08	78/79
T580 42 09	78/79
T580 42 10	78/79
T580 42 11	78
T580 42 12	78
T580 42 14	78
T580 42 15	78
T580 42 16	78
T580 42 17	78
T580 42 18	78
T580 85 01	79
T580 85 02	79
T580 85 03	79
T580 85 11	79
T580 85 12	79
T580 85 13	79
T580 91 15	68/69
T580 91 25	68/69
T580 91 35	68/69
T580 91 45	68/69
T580 91 55	68/69
T580 91 65	68/69
T580 91 75	68/69
T708 02 20	98/100/110
T708 02 80	98/100
T708 02 90	106
T708 03 00	98/100/104/106
T708 03 10	108
T708 03 80	102
T708 04 00	98
T708 04 10	98
T708 04 35	98
T708 05 00	98
T708 05 15	108
T708 05 65	108
T708 06 00	98
T708 09 20	104
T708 14 00	98/100/110
T708 14 10	98/100
T708 53 40	100/104/106/108
T708 53 42	100/104/106/108
T709 03 00	94/96
T709 03 03	94/96
T709 03 04	94/96
T709 04 00	94
T709 04 10	94
T709 05 00	94
T709 05 20	94/96
T709 05 80	94/96
T709 14 00	94/96
T709 53 40	96
T709 53 42	96
T716 03 00	120
T716 03 50	120
T716 05 30	120
T716 05 40	120
T716 14 30	120
T716 14 86	120
T717 05 05	122
T717 05 10	122
T720 03 00	112/116
T720 04 00	114/118
T720 20 00	116/118
T720 23 10	112/114/116/118
T720 23 14	112/114/116/118
T720 23 20	112/114
T720 23 24	112/114
T720 23 30	112/114
T720 23 34	112/114
T752 05 00	132
T752 05 30	132
T755 05 30	110
T756 03 00	110
T760 05 00	124
T760 05 10	124
T762 02 00	126
T762 02 20	126
T762 02 22	126
T762 02 24	126
T762 02 26	126
T762 02 28	126
T762 02 30	126
T762 03 00	126
T762 03 10	126
T762 14 00	126
T762 14 20	126
T764 03 00	128
T764 04 00	128
T764 05 00	128
T764 05 20	128
T764 05 80	128
T764 06 00	128
T764 14 00	128
T764 14 20	128
T764 14 40	128
T764 14 60	128
T783 00 00	84/87
T783 00 10	85/87
T783 00 15	85/87
T783 00 20	85/87
T783 01 05	84/91
T783 35 00	84/87/91
T785 00 00	84/87
T785 00 30	85/89
T785 00 32	85/89/90
T785 00 34	85/89/90
T785 00 40	85/88
T785 00 42	85/88
T785 00 50	85/88
T785 00 55	85/88
T785 00 60	85/88
T785 00 62	85/89
T785 00 70	85/88
T785 00 80	85/89
T785 00 90	85/90
T785 00 92	85/90
T785 00 93	85/90
T785 00 94	85/90
T785 00 95	85/90
T785 00 96	85/90
T785 00 97	85/90
T785 01 00	84/91
T785 02 00	85/89
T785 02 01	89
T785 02 05	85/89
T785 35 00	84/87/91
T788 00 00	84/87
T788 00 10	85/87
T788 00 15	85/87
T788 00 20	85/87
T788 00 30	85/89
T788 00 35	85/89
T788 00 40	85/88
T788 00 45	85/88
T788 00 50	85/88
T788 00 55	85/88
T788 35 00	84/87
T795 03 00	130
T795 03 05	130
T795 05 20	130

TIMELINE

2011 — TRAXION is founded

2015 — ISO 9001 certification, a commitment to quality

2020 — Move to new premises in Vourles (69)

2022 — Launch of the Mixed Hook: TRAXION becomes a coupling manufacturer

... 2030 — A trajectory already well under way

KEY FIGURES

Traxion®



+20

EMPLOYEES



+600

CUSTOMERS IN EUROPE

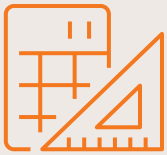

1

DESIGN OFFICE



2 000M²

OF PRODUCTION



+6M€

TURNOVER

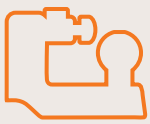

+2 500

PRODUCT
PART NUMBERS

OUR RESPONSIBLE COMMITMENTS

OFFER MORE WITH LESS

We work to reduce our carbon footprint as much as possible and make it a point of honour to eco-design our products. This eco-design means reducing raw materials, which results in a significant weight reduction of our devices and directly lowers fuel consumption for the vehicles fitted with them. We also keep our product packaging to the strict minimum.

What's more, because they are bolted on, our products do not need to be welded, which eliminates a source of pollution (another point scored for the environment).

RESPONSIBLE SOURCING

1,000 km, not one more.

At TRAXION, we do not look for suppliers or raw materials beyond this distance, and we source mainly in France.

LASTING DURABILITY

Why change everything when only one part needs replacing? At TRAXION, we design products that are repairable and built to last.





SHARED VALUES... TO BE SHARED!

RIGOUR

Safety is not an accessory!

The world of safety equipment in which we operate leaves no room for approximation.

The couplings and URPs we design, manufacture and distribute comply with the regulatory directives R55.02 and R58.03 in force.

Tested, proven and sometimes even mistreated on our test benches, our devices meet the highest regulatory requirements.

ADVICE

We genuinely care about users' expectations and about the applications our products will be put to.

At TRAXION, customers come with a need and leave with a solution... which is not always the one they had in mind. Our strength lies in active listening and in our ability to steer them towards the device that will fully meet their expectations.

BOLDNESS

We love finding new solutions. We love innovation. We love pushing boundaries. The result of advanced R&D, the equipment we manufacture is smart, multifunctional and easy to use.

ANTICIPATION

Today we are imagining tomorrow's products. An ability we owe to our expertise, our presence, our field experience, our vision and our knowledge of the market.

AGILITY

At TRAXION, we sell more than a product, we sell functionality. Here, constraints give rise to opportunities, and obligations give rise to complementary operating solutions. Because, day to day, a Swiss army knife is more practical than a simple blade.

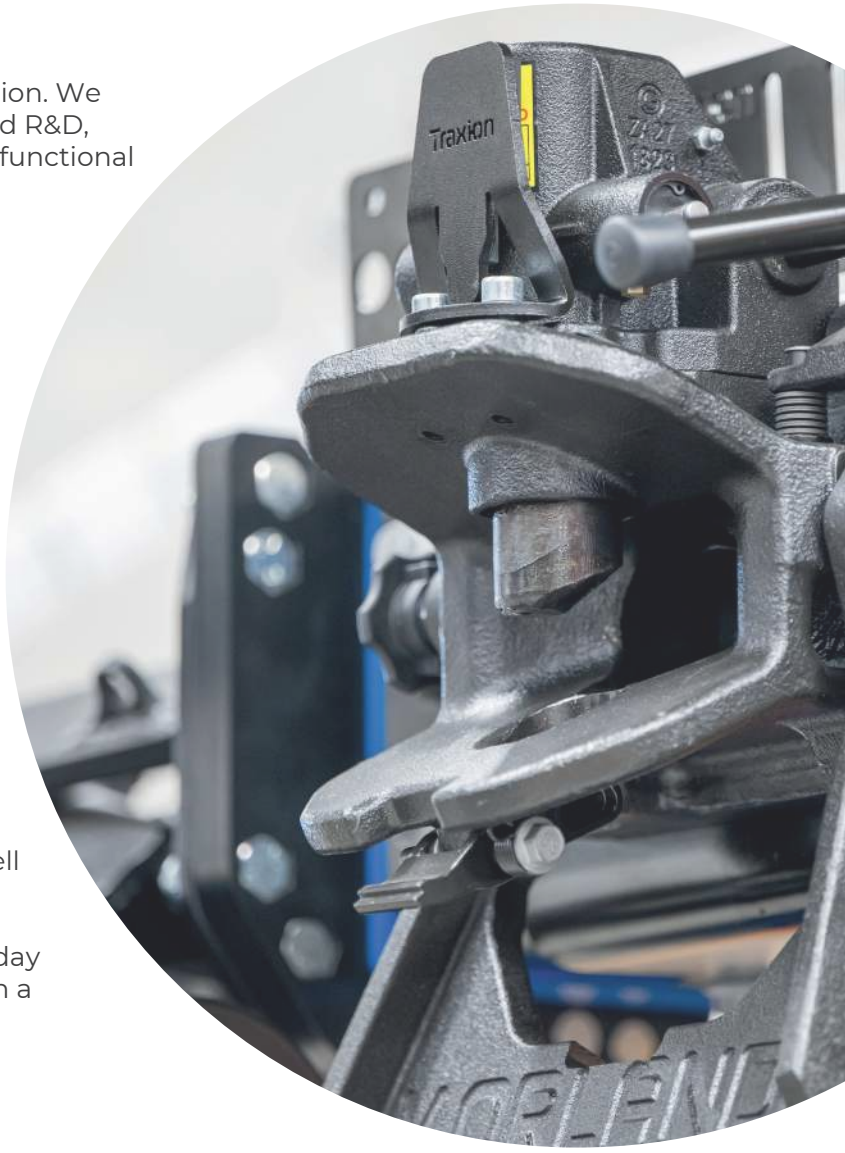

AND IN-HOUSE?

A STRONG CORPORATE CULTURE

At TRAXION, team spirit is our trademark. It is based on four values shared by all: respect, mutual support, dialogue and kindness.

We also cultivate a resolutely entrepreneurial mindset. Because we love challenges, we support employees who want to innovate and invent new ways of working, designing or promoting our products.

Finally, we are convinced that a stimulating professional life is fuelled by a well-protected personal life.



OUR INTERNATIONAL SALES REACH



. Key Account Manager Bodybuilders .

06 33 79 29 85

. International business development .

+33 474 72 1000

Distribution Network Manager .
. Product Department .
Sales Management
Sales Admin .

04 74 72 10 00

Traxion

TOOLS DESIGNED FOR YOU

SUPPORT FOR DESIGN AND DECISION-MAKING

A coupling is a piece of safety equipment that is chosen according to technical criteria and approvals, rather than brand, colour or habit...

In accordance with UNECE Regulation R55, the coupling line must be validated by calculation, thereby ensuring that the towing capacities are sized for use on the open road, based on the maximum technically permissible mass of the combination.

We have developed simple tools to help you define the **D / Dc / V (kN) values of your vehicle combinations in all situations:**

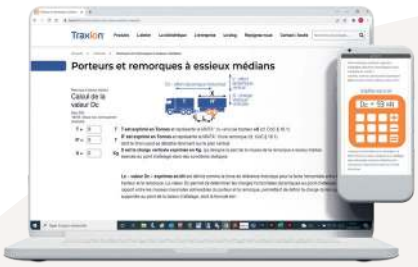

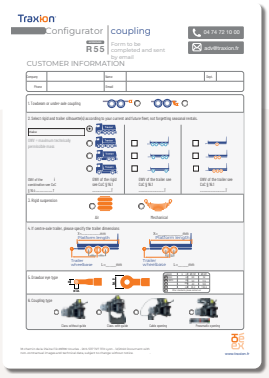



1.

USE

OUR ONLINE CALCULATOR
AT WWW.TRAXION.FR
"L'ATELIER" SECTION

2.

FILL IN

THE FORM
AND SEND IT BACK
TO OUR TECHNICAL TEAMS,
who will determine the coupling configurations that comply with regulations (available from our teams)

3.

ASK FOR

THE TECHNICAL
AND REGULATORY GUIDE -
COUPLING COMPLIANCE
FOR HGVs

We are here to support you at every stage of the process, ensuring that your coupling devices comply with the regulatory standards in force.

BESPOKE

This catalogue offers many part numbers designed and manufactured to measure. For this reason, generic codes are initially assigned by default to all your specific projects. Once your drawings have been validated, you will then be given a part number matching them.

The vehicle pictograms shown in this catalogue are for information only.

To ensure that a coupling device is compatible with the vehicle combination for which it is intended, check the characteristics of the vehicles to be equipped or, failing that, ask TRAXION for advice.

It is essential that all our products are fitted and used in strict compliance with the rules in force. Responsibility for fitting and use lies with the fitter and the user respectively. We encourage you to consult the fitting, use and maintenance instructions, available on request, to ensure the correct and safe use of our products.

01

COUPLINGS

COMPACT MIXED HOOK	14
COMFORT MIXED HOOK	16
BALL COUPLING	18
ADAPTER PLATE	20
UNIVERSAL OFFSET BRACKET ADAPTER	24
SWIVEL HOOK	28
FIXED HOOK	29
FORK-LIFT COUPLING	30
AUTOMATIC FIXED DIN40 COUPLING	32
TRAXION BNA COUPLING	34
DIN50 COUPLING	42
DIN40 COUPLING	48
TOWING CLEVIS	52
BALL-AND-SOCKET COUPLING	54
NATO COUPLING	56
DIN50 COUPLING FOR EXCEPTIONAL LOADS	58
INSPECTION GAUGES	60

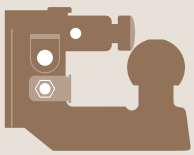

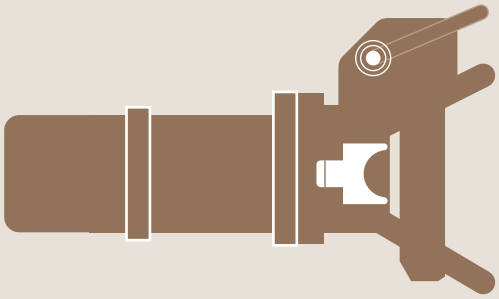

MIXED HOOK
COMPACT

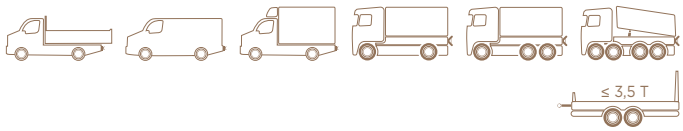



DOUBLE HOLE PATTERN MODEL

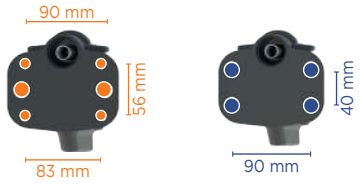

DOUBLE HOLE PATTERN
83 x 56 + 90 MM

HOLE PATTERN
90 x 40 MM



ILLUSTRATION WITH CAMERA BRACKET



FOR RABBIT-HEAD AND BNA DRAWBAR EYES



IN OPEN POSITION

DESCRIPTION

- **Innovative concept & design:** a concentrate of safety, compactness and practicality
- **Ultra-compact format:** no interference with the rear doors of panel vans, does not hide the licence plate
- **No pin!** Never lose it again: the safety device is built into the coupling
- **Mechanism protected** from dust, sand and gravel
- **Easy integration** with a standard step
- **Trailer security** with optional padlock

- **For towing trailers up to 3.5 T**
- **Two hole patterns available as standard:**
  - 83 × 56 mm + 2 holes Ø90 mm = double hole pattern on the same plate
  - 90 × 40 mm
- **Black cataphoresis coating**: maximum corrosion resistance
- **Approval** for vehicles with a GWV(1) up to 48 T
- **Option:** camera bracket

(1) maximum technically permissible mass (see CoC)

Description	T220 75 00	T220 75 40
Hole pattern (mm)	83 x 56 2 holes 90	90 x 40
Closing	Manual	Manual
D / Dc (kN)	32	32
S (kg)	390	390
Weight (kg)	3,8	3,8
Class	A, S	A, S

Options	Part number
Screw set 83 x 56	**T520 75 56**
Screw set 90 x 40	**T520 75 40**
Screw set 90	**T520 75 90**
Padlock	**T524 75 90**

01

MOUNTING DIMENSIONS

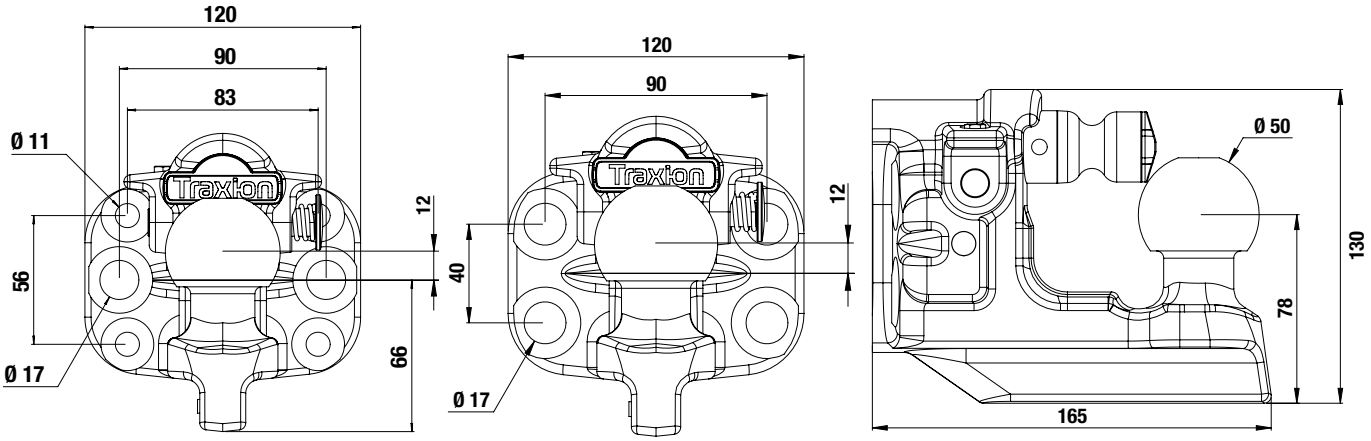

T220 75 00

T220 75 40





SPARE PARTS

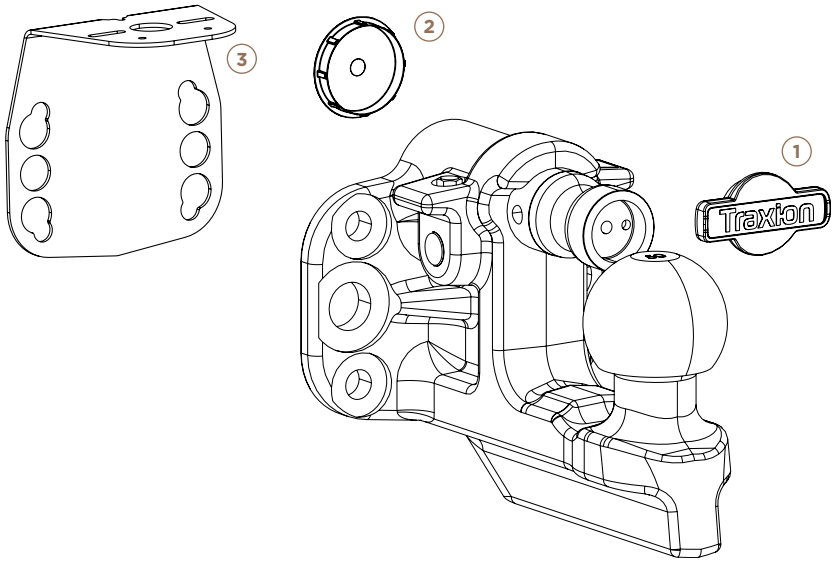

		Part number
1	Grip handle	T160 75 70
2	Cap	T160 75 72
3	Plate and camera bracket	T524 48 00



MIXED HOOK
COMFORT

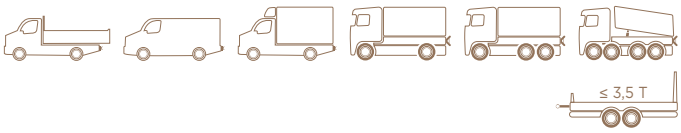



DOUBLE HOLE PATTERN MODEL

MADE IN Traxion

APPROVED R55



DOUBLE HOLE PATTERN
83 x 56 + 90 MM



HOLE PATTERN
90 x 40 MM



CAMERA BRACKET OPTION



FOR RABBIT-HEAD AND BNA DRAWBAR EYES



IN OPEN POSITION

DESCRIPTION

- **With shock absorber:** reduces trailer jolts with BNA drawbar eye for greater driving comfort
- **Push button** for effortless assisted locking
- **Innovative concept & design:** a concentrate of safety, compactness and practicality
- **Ultra-compact format:** no interference with the rear doors of panel vans, does not hide the licence plate
- **No pin!** Never lose it again: the safety device is built into the coupling
- **Mechanism protected** from dust, sand and gravel
- **Easy integration** with a standard step
- **Trailer security** with optional padlock
- **For towing trailers up to 3.5 T**
- **Two hole patterns available as standard:**
  - 83 × 56 mm + 2 holes Ø90 mm = double hole pattern on the same plate
  - 90 × 40 mm
- **Black cataphoresis coating**: maximum corrosion resistance
- **Approval** for vehicles with a GWV(1) up to 48 T
- **Option:** camera bracket

(1) maximum technically permissible mass (see CoC)

VIDEO

Description	T220 76 08	T220 76 48
Hole pattern (mm)	83 x 56 2 holes 90	90 x 40
Closing	Assisted	Assisted
Shock absorber	Yes	Yes
D / Dc (kN)	32	32
S (kg)	390	390
Weight (kg)	3,8	3,8
Class	A, S	A, S

Options	Part number
Screw set 83 x 56	**T520 75 56**
Screw set 90 x 40	**T520 75 40**
Screw set 90	**T520 75 90**
Padlock	**T524 75 90**

01

MOUNTING DIMENSIONS

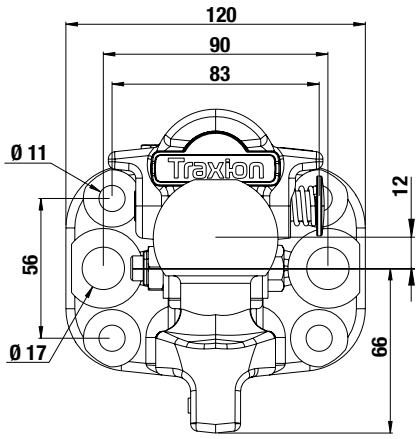

T220 76 08

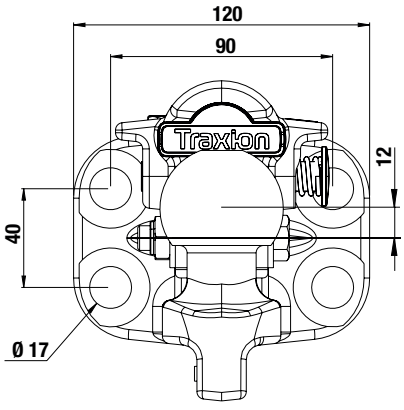

T220 76 48

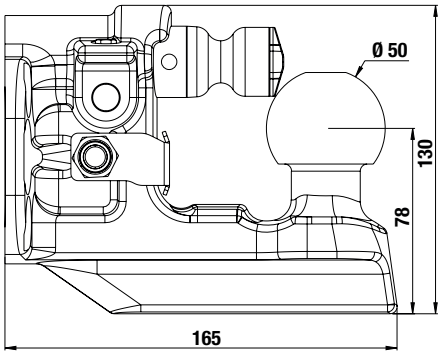





SPARE PARTS

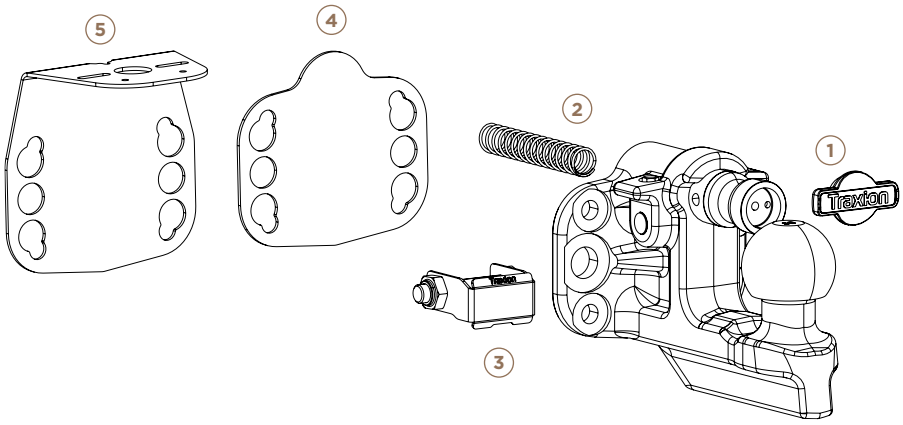

		Part number
1	Grip handle	T160 75 70
2	Spring	T160 75 71
3	Shock absorber	T160 75 85
4	Cover plate	T160 75 80
5	Plate and camera bracket	T524 48 00



BALL COUPLING

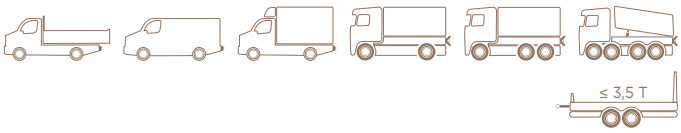

MADE IN Traxion

APPROVED R55



NEW



DOUBLE HOLE PATTERN
83 x 56 + 90 MM

DESCRIPTION

- Innovative design
- For trailers up to 3.5 T max.
- With hole patterns: 83 x 56 mm and 2 holes of 90 mm
- Black cataphoresis coating
- Approved for rigids with a GWV(1) up to 48 T

(1) maximum technically permissible mass (see CoC)

Description	T205 75 00
Hole pattern (mm)	83 x 56 2 holes 90
D / Dc (kN)	32
S (kg)	390
Weight (kg)	4,2
Class	A

Options	Part number
Screw set 83 x 56	**T520 75 56**
Screw set 90	**T520 75 90**

MOUNTING DIMENSIONS

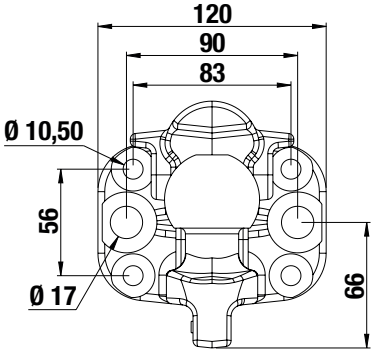

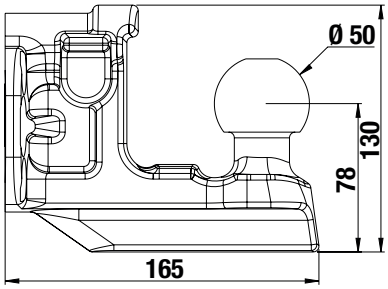


Traxion


Traxion
MORLAND


Traxion


Traxion
Traxion









ADAPTER **PLATE**

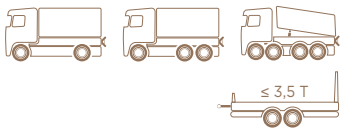

FOR TOWBEAM WITH COMFORT MIXED HOOK



ILLUSTRATION T580 21 60



CAMERA BRACKET
OPTION
T524 48 00

DESCRIPTION

- R55 approved device
- For towing trailers up to 3.5 T
- Factory-fitted Comfort mixed hook with assisted locking
- To be fitted on towbeams with hole patterns:
  - 120 x 55 mm
  - 140 x 80 mm
  - 160 x 100 mm
- Black cataphoresis coating
- Safety ring for trailers with overrun brakes
- Supplied with screw set for quick fitting on new vehicles or retrofit

Part number	T580 2120	T580 2140	T580 2160
Towbeam hole pattern (mm)	120 x 55	140 x 80	160 x 100
D (kN)		32	
Dc (kN)		32	
S (kg)		390	
Weight (kg)	5,9	6,5	8,3

MOUNTING DIMENSIONS

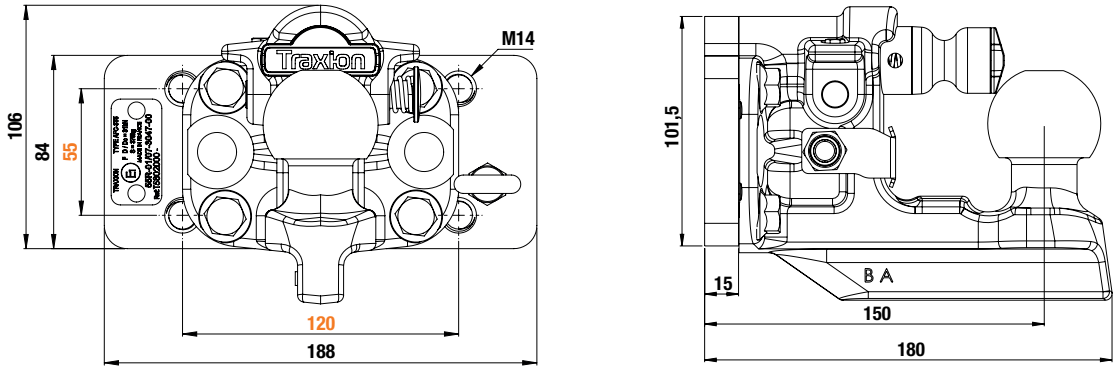

T580 21 20

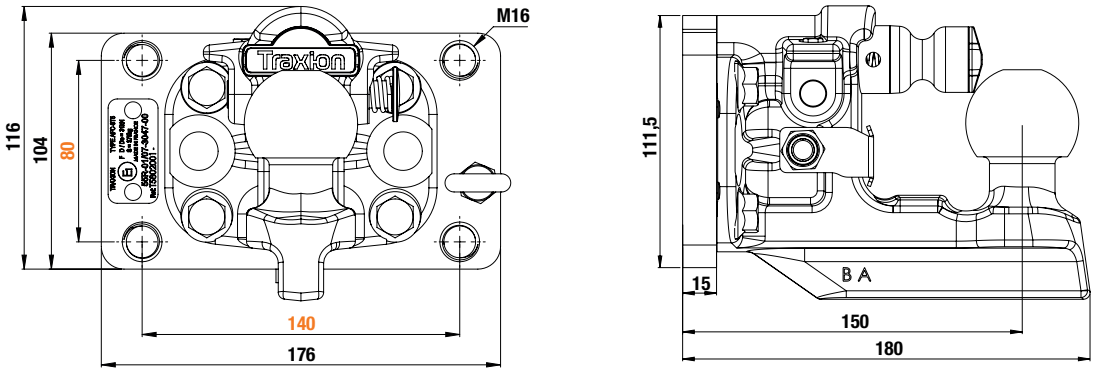

T580 21 40

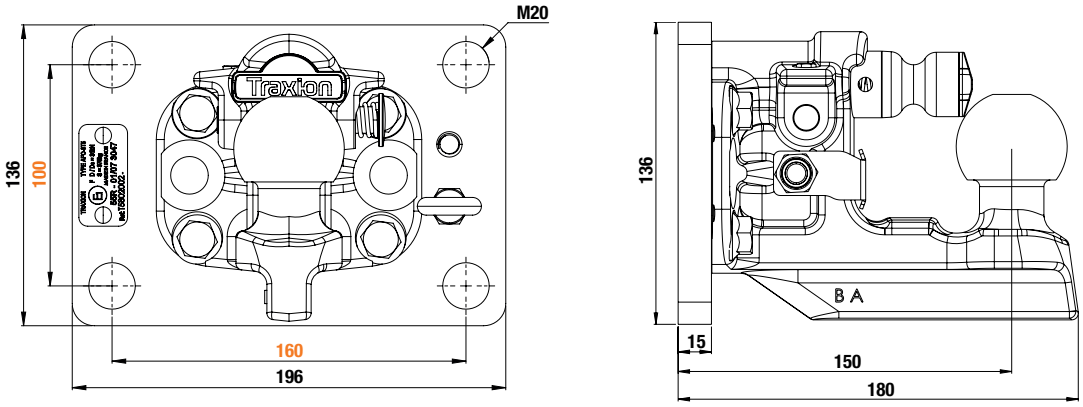

T580 21 60

ADAPTER **PLATE**

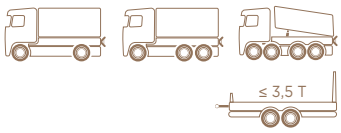

FOR TOWBEAM WITH BALL COUPLING

MADE IN Traxion

APPROVED R55

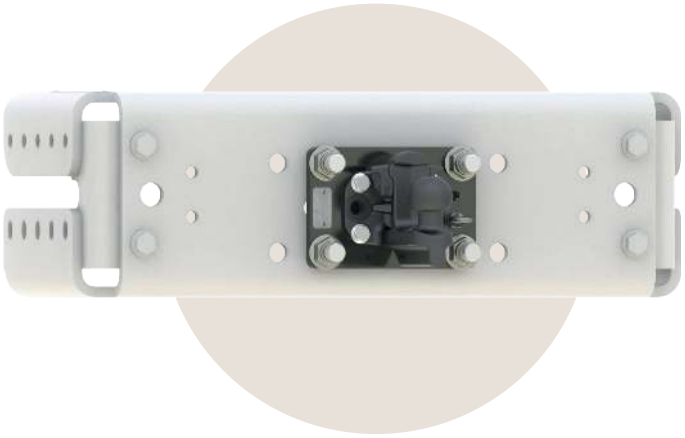



CAMERA BRACKET OPTION
T5244800

NEW

DESCRIPTION

- R55 approved device
- For towing trailers up to 3.5 T
- Factory-fitted Comfort mixed hook with assisted locking
- To be fitted on towbeams with hole patterns:
  - 120 x 55 mm
  - 140 x 80 mm
  - 160 x 100 mm
- Black cataphoresis coating
- Safety ring for trailers with overrun brakes
- Supplied with screw set for quick fitting on new vehicles or retrofit

Part number	T5802125	T5802145	T5802165
Towbeam hole pattern (mm)	120 x 55	140 x 80	160 x 100
D (kN)		32	
Dc (kN)		32	
S (kg)		390	
Weight (kg)	5,9	6,5	8,3

MOUNTING DIMENSIONS

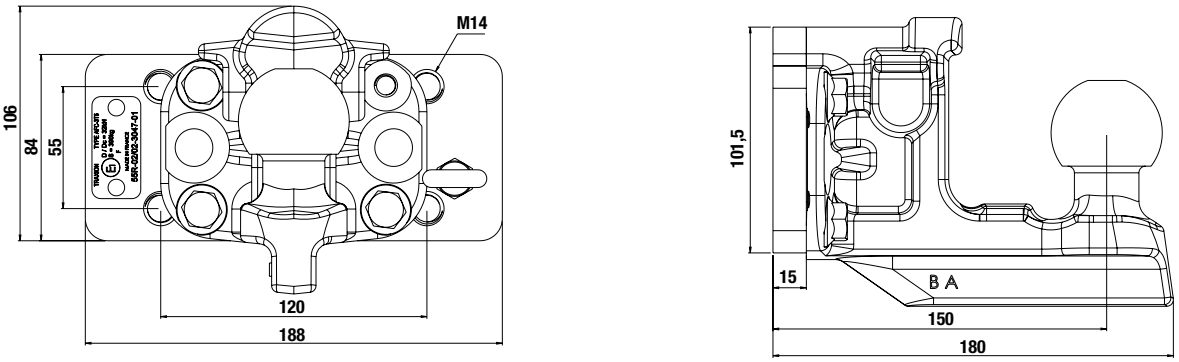

T580 2125

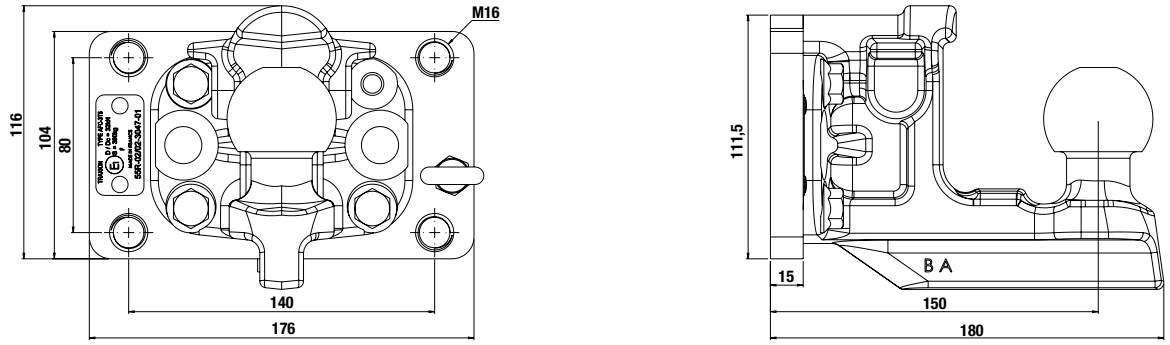

T580 2145

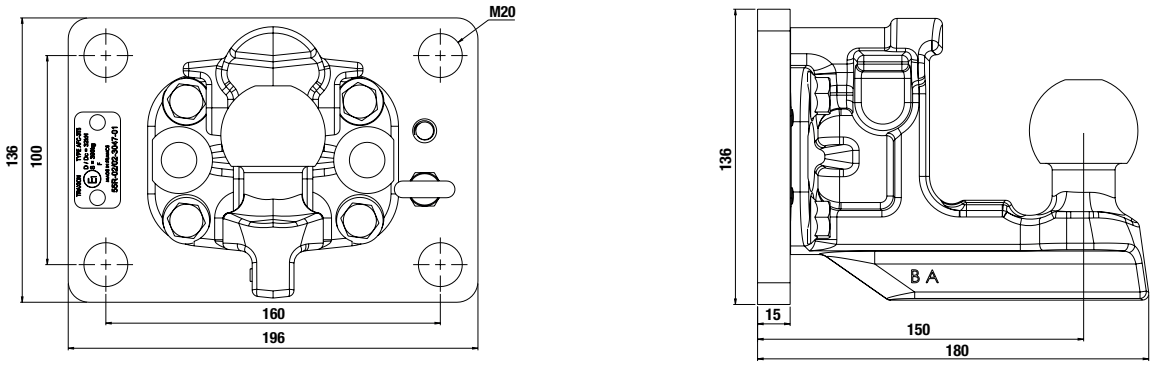

T580 2165

ADAPTER
UNIVERSAL OFFSET BRACKET
FOR TOWBEAM WITH COMFORT MIXED HOOK

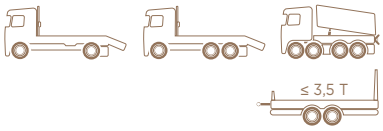

MADE IN Traxion

APPROVED R55 PATENTED





CAMERA BRACKET OPTION T5244800



TILTED EXAMPLE

DESCRIPTION

- 2-in-1 bracket: tilting + rear offset
- Allows a 129 mm offset of the mixed hook
- Multi-position bracket: 0°, 15°, 22.5° and 30°
- To be fitted on OEM towbeams
- Compatible with flatbed vehicles with chamfered corners
- 3-in-1: fits towbeams with hole patterns:
  - 120 x 55
  - 140 x 80
  - 160 x 100 mm
- Cataphoresis coating
- Supplied with:
  - Comfort mixed hook
  - safety ring for trailers with overrun brakes

Part number	T5802110
Towbeam hole pattern (mm)	120 x 55 140 x 80 160 x 100
D (kN)	32
Dc (kN)	32
S (kg)	390
Weight (kg)	15,8

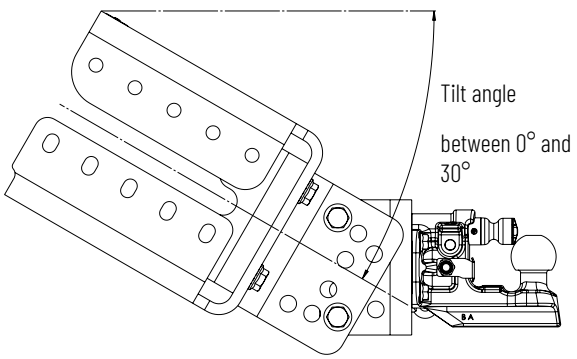

MOUNTING DIMENSIONS

COMPATIBLE WITH ALL TOWBEAMS WITH HOLE PATTERNS
120 x 55 / 140 x 80 / 160 x 100 (BRACKET SEEN FROM THE BACK)
MOUNTING DIAGRAMS TO BE FOLLOWED ACCORDING TO APPROVAL

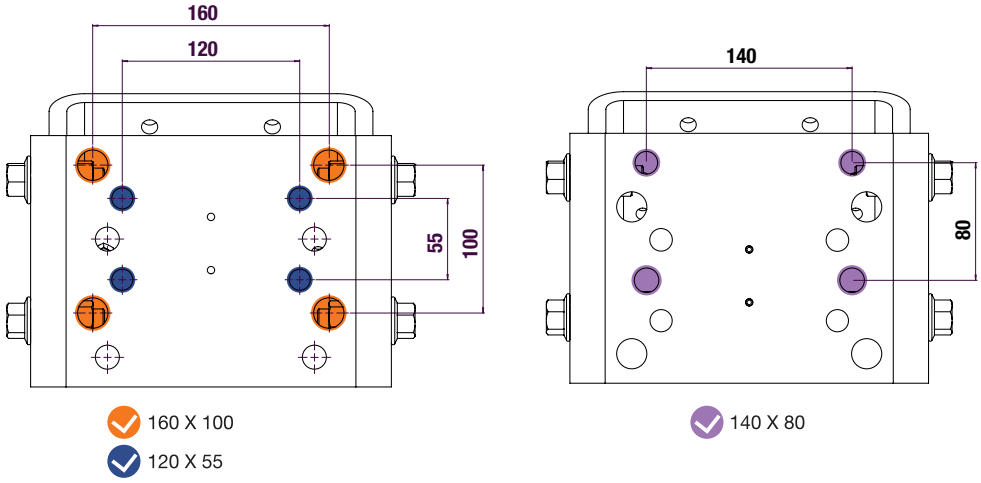

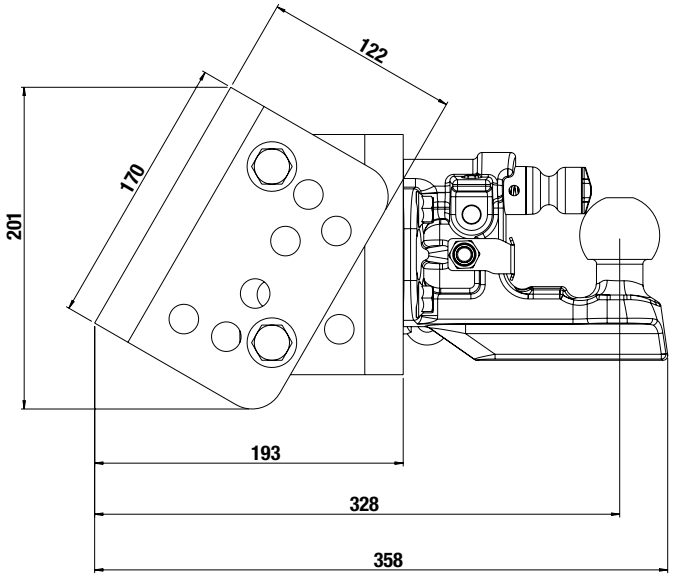

TILTING BRACKET

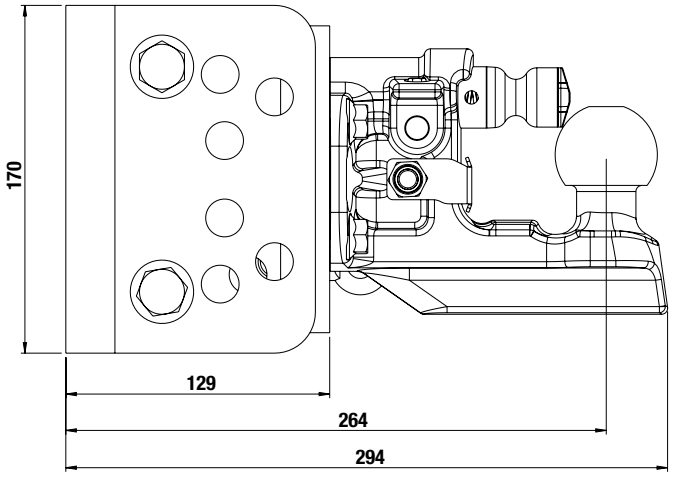

BRACKET MOUNTED VERTICALLY

ADAPTER
UNIVERSAL OFFSET BRACKET
FOR TOWBEAM WITH BALL COUPLING OR FIXED HOOK



MADE IN Traxion

APPROVED R55 PATENTED



T580 2115



TILTED EXAMPLE



T580 2168



TILTED EXAMPLE

DESCRIPTION

- 2-in-1 bracket: tilting + rear offset
- Allows a 129 mm offset of the mixed hook
- Multi-position tilting bracket at 0°, 15°, 22.5° and 30°, compatible with vehicles with chamfered corners
- To be fitted on OEM towbeams
- Compatible with flatbed vehicles with chamfered corners
- 3-in-1: 1 fitting on towbeams with hole patterns:
  - 120 x 55
  - 140 x 80
  - 160 x 100 mm
- Cataphoresis coating
- Supplied with:
  - ball coupling / fixed hook
  - safety ring for trailers with overrun brakes

Part number	T580 2115	T580 2168
Towbeam hole pattern (mm)	120 x 55 140 x 80 160 x 100	
D (kN)	32	31
Dc (kN)	32	31
S (kg)	390	340
Weight (kg)	15,8	17,5

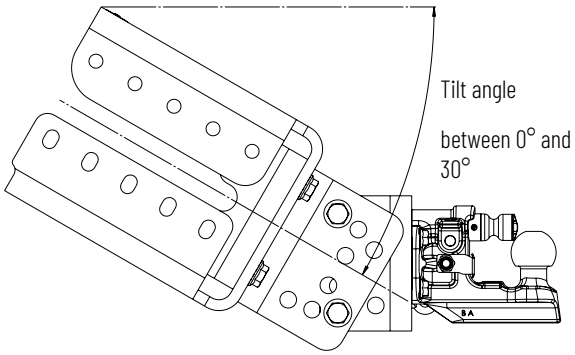

01

MOUNTING DIMENSIONS

COMPATIBLE WITH ALL TOWBEAMS WITH HOLE PATTERNS
120 x 55 / 140 x 80 / 160 x 100 (BRACKET SEEN FROM THE BACK)
MOUNTING DIAGRAMS TO BE FOLLOWED ACCORDING TO APPROVAL

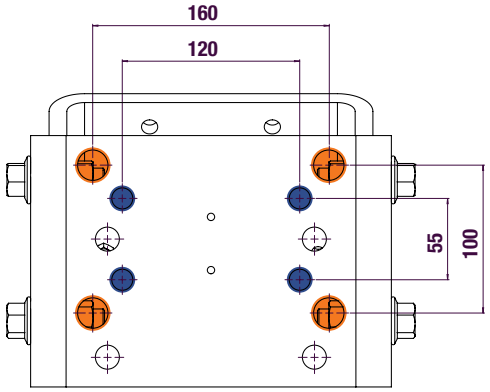

160 X 100
120 X 55

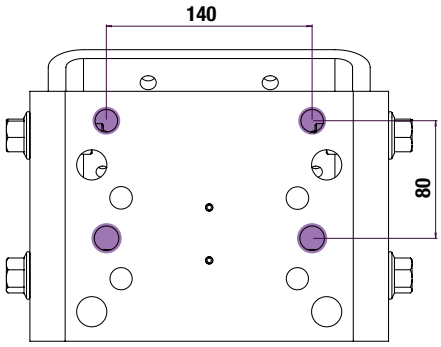

140 X 80

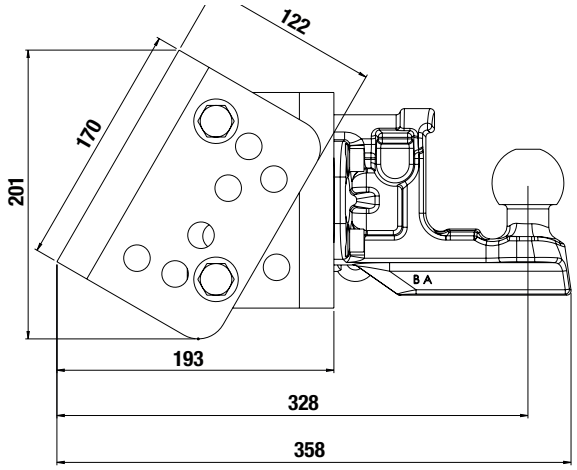

TILTING BRACKET

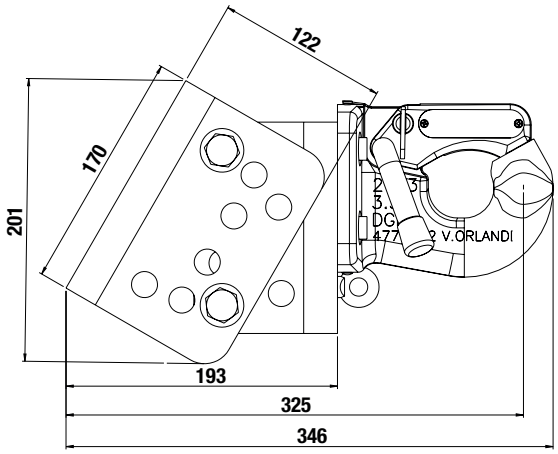

TILTING BRACKET

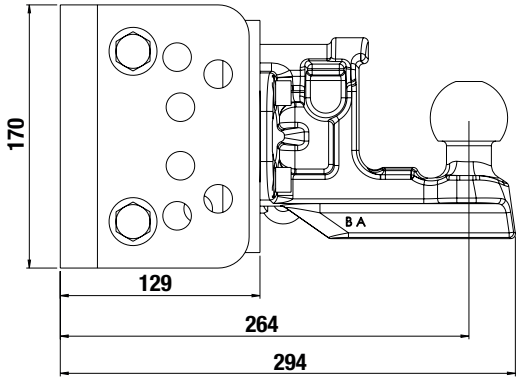

BRACKET MOUNTED VERTICALLY

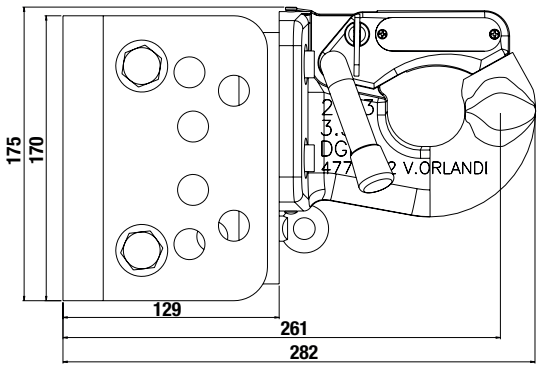

BRACKET MOUNTED VERTICALLY

T580 2115

T580 2168

SWIVEL HOOK

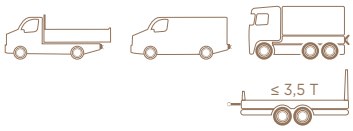

APPROVED R55

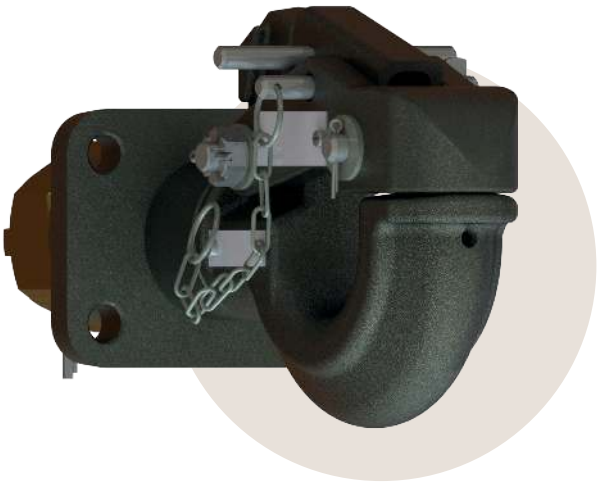



FOR FIXED DRAWBAR EYES
BNA AND NATO

DESCRIPTION

- Military coupling or for 4x4 vehicles
- Rocker pin for easy opening and secure closing
- Simple, reliable and sturdy
- Through-mounted swivel hook Ø 54 mm
- Device for fitting on 83 x 56 mm hole pattern plate

Part number	T276 57 61
Type	UN761
Hole pattern (mm)	83 x 56
D (kN)	27
Dc (kN)	21
V (kN)	15
S (kg)	350
Weight (kg)	7,5
Class	K3

Option	Part number
Screw set 83 x 56	T520 75 56

MOUNTING DIMENSIONS

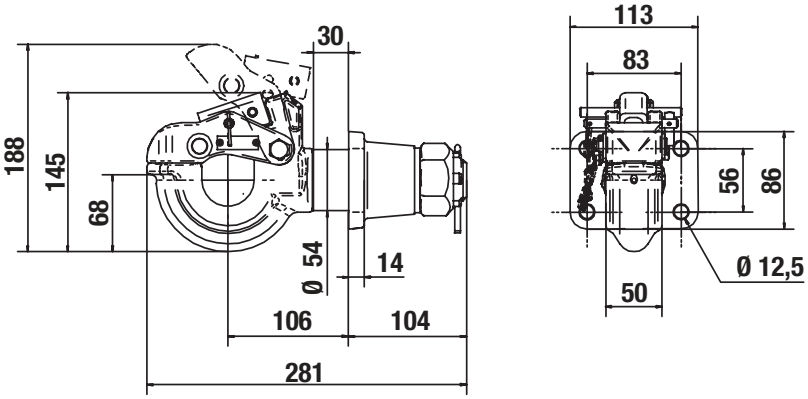

FIXED HOOK

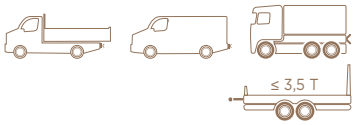

01

APPROVED R55





FOR DRAWBAR EYES
BNA AND NATO

DESCRIPTION

- For rigids up to 32 T and trailers up to 3.5 T max.
- Fixed hook for BNA 42 x 68 or NATO 41 x 76 toroidal eyes
- Rocker pin for easy opening and secure closing
- Simple, reliable and sturdy
- Device for fitting with 83 x 56 or 120 x 55 mm hole pattern

Part number	T276 15 10	T276 15 40
Type	ULPYO	
Hole pattern (mm)	83 x 56	120 x 55
D (kN)	31	
Dc (kN)	31	
S (kg)	340	
Weight (kg)	5,5	
Class	S	

MOUNTING DIMENSIONS

Model	A (mm)	B (mm)	C (mm)	D (mm)	E (mm)	F (mm)
T276 15 10	83	56	11	150	119	122,5
T276 15 40	120	55	15			

Options	Part number
Screw set 83 x 56	T520 75 56
Screw set 120 x 55	T152 01 30

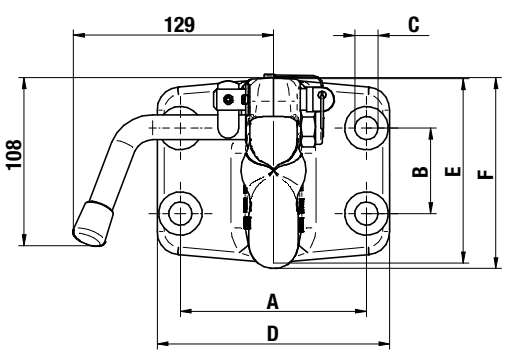

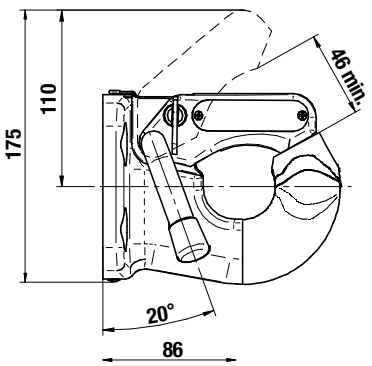

COUPLING
FOR FORK-LIFTS



* APPROVED R55



FOR DRAWBAR EYES
DIN8454 & DIN74054
REF. T5102040



OPTION
REMOTE
CABLE OPENING
DEVICE

DESCRIPTION

- A complete range for industrial and road use
- Fully automatic locking as the eye passes through
- Manual or cable opening
- For greater safety, remote opening device without getting off the fork-lift
- Easy to fit, simple to use, maintenance-free
- Fitting on plates with 120 x 55 and 130 x 30 mm hole patterns
- 25 mm diameter pin
- Option: remote opening

WARNING: Couplings T2250252, T2250253 and T2250254 must only be used on private roads

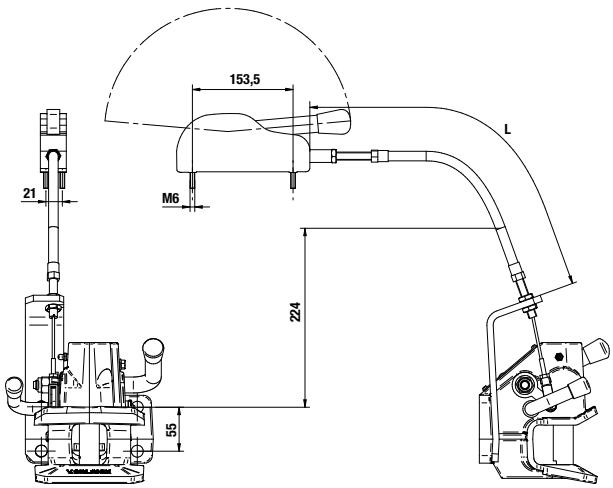

Part number	T225 02 50*	T225 02 51*	T225 02 52
Hole pattern (mm)	120 x 55	130 x 30	120 x 55
D (kN)		42	
Dc (kN)	30	30	
S (kg)	250	250	
Weight (kg)	7,5	7,5	7,4
Class	S	S	S

* APPROVED R55

Part number	T225 02 53	T225 02 54
Hole pattern (mm)	130 x 30	120 x 55
D (kN)	42	
Dc (kN)		
S (kg)		
Weight (kg)	7,2	7,2
Class	S	

Cable opening option	
Cable length (mm)	Part number
2500	**T520 25 00**
1500	**T520 15 00**
2000	**T520 20 00**
3000	**T520 30 00**
4000	**T520 40 00**

01

MOUNTING DIMENSIONS

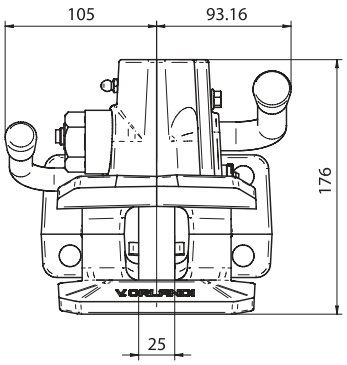

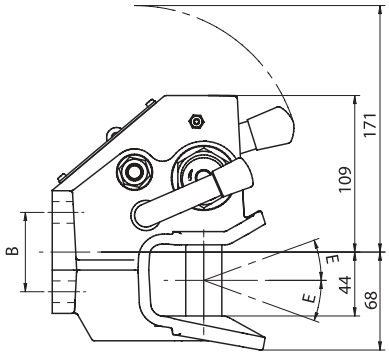

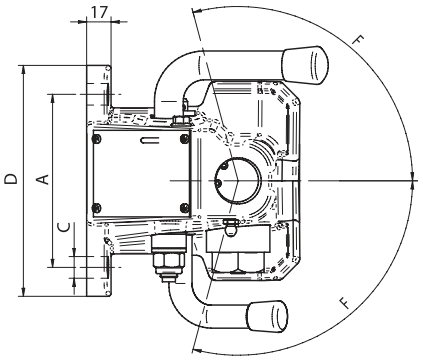

Model	A (mm)	B (mm)	C (mm)	D (mm)	E (mm)		F (mm)	
					Eye DIN8454 (°)	Eye DIN74054 (°)	Eye DIN8454 (°)	Eye DIN74054 (°)
T2250250	120	55	15	160				
T2250251	130	30	14	155				
T2250252	120	55	15	160	+/- 30	+/- 22	105	95
T2250253	130	30	14	155				
T2250254	120	55	15	160				

SPARE PARTS

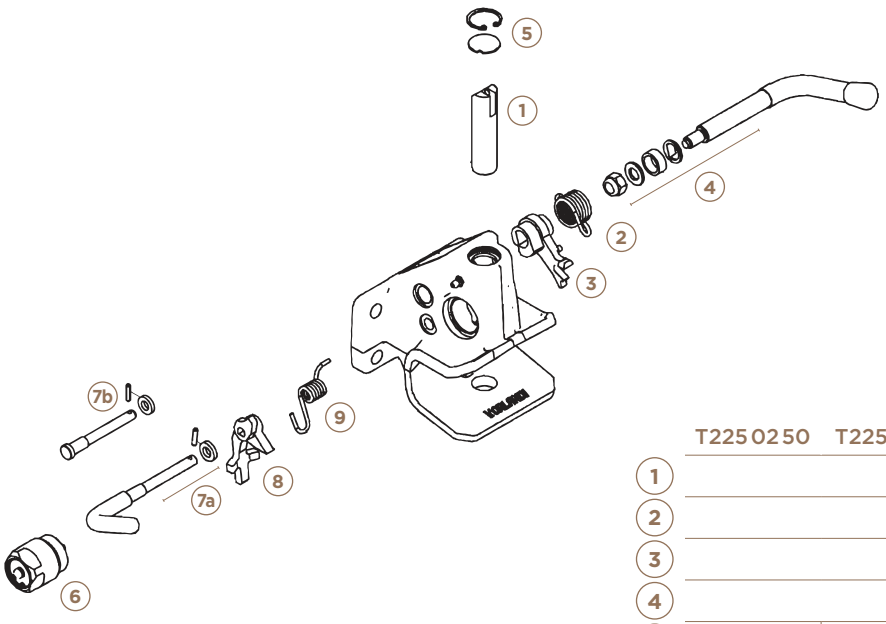

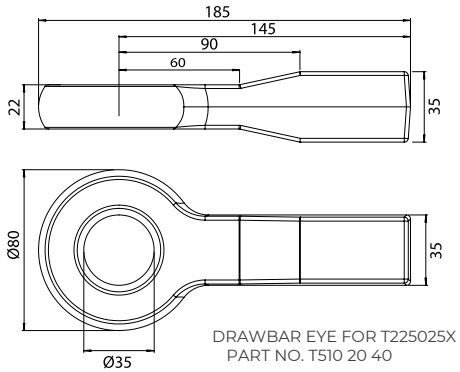

DRAWBAR EYE FOR T225025X
PART NO. T510 20 40

	T2250250	T2250251	T2250252	T2250253	T2250254
1	T1520399				
2	T1520389				
3	T1520390				
4	T1520391				
5	T1520405	T1520405	T1520392		
6	T1520531				
7a	T1520393				
7b					T1520483
8	T1520394				
9	T1520395				

After-sales cable opening	
Cable length (mm) + integrated handle	Part number
1300	T1580101
1500	T1580102

DIN40 COUPLING
AUTOMATIC FIXED



APPROVED R55





FOR DRAWBAR EYES DIN40

DESCRIPTION

- Sturdy one-piece coupling
- Automatic locking
- Range approved for fitting on LCVs or coaches
- Very safe and easy to use
- Very compact in low-handle version
- Simplified maintenance with grease nipple

Part number	T238 03 80	T238 03 81	T238 03 82	T238 03 83
Type	GA380		GA382	
Opening	High	Low	High	Low
Hole pattern (mm)	120 x 55		83 x 56	
D (kN)	30			
Dc (kN)	30			
V (kN)	18			
S (kg)	350			
Weight (kg)	5,8			
Class	S			

Options	Part number
Screw set 83 x 56	**T520 75 56**
Screw set 120 x 55	**T152 01 30**

01

MOUNTING DIMENSIONS

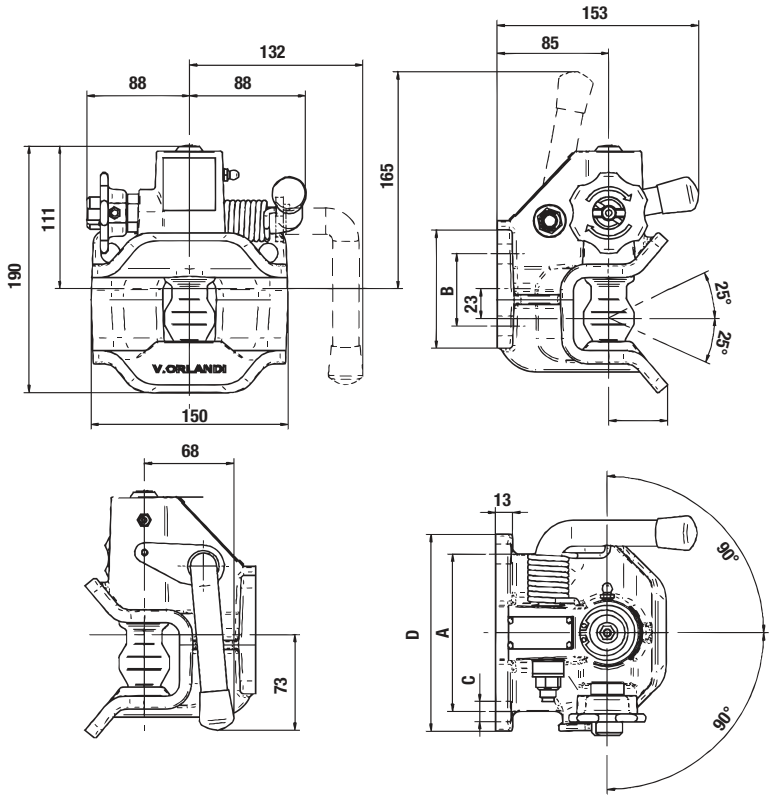

Model	A (mm)	B (mm)	C (mm)	D (mm)
T2380380	120	55	15	150
T2380381				
T2380382	83	56	10,5	
T2380383				

SPARE PARTS

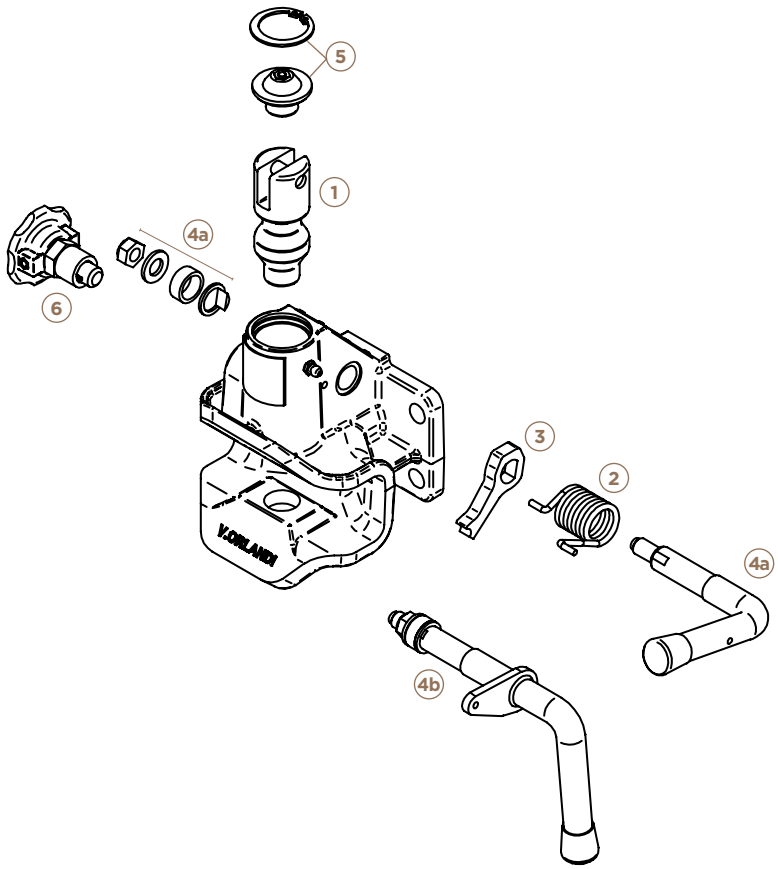

	Part number
1	T1520254
2	T1520255
3	T1520256
4a	T1520257
4b	T1520555
5	T1520258
6	T1520335

BNA COUPLING
TRAXION MANUAL

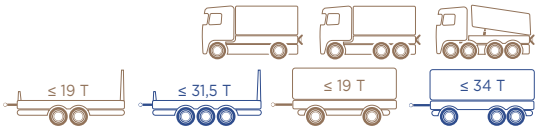

APPROVED R55

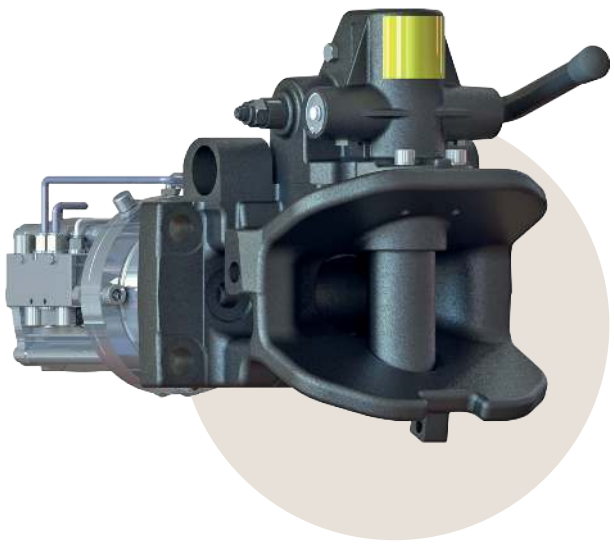

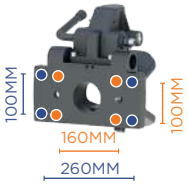

DOUBLE HOLE PATTERN
160x100 + 260x100
FOR RIGIDS
DAF - DAIMLER TRUCK - MAN - RENAULT TRUCKS SCANIA - VOLVO TRUCKS



SINGLE HOLE PATTERN
160X100
FOR RIGIDS
DAF
IVECO



COUPLING HEAD PROTECTION



PROTECTIVE COVER

DESCRIPTION

- Simple, reliable and sturdy
- Comfort + safety: hydro-pneumatic slack adjustment (air / oil)
- Compact for installation on tippers and finishers
- Automatic locking
- Plates for fitting on all OEM towbeams
- Simplified maintenance with accessible grease nipples
- Mechanical safety indicators showing open / closed positions
- Supplied with studs for 160 x 100 fitting

Options	Part number
Coupling head protection	T524 42 80
Traxion cover - Operating range -30°/+70°C - Two-tone orange / black Camera window with protective flap	T522 15 50
Screw set for 260x100 fitting only	T152 06 45
Spacer for inner fitting on MAN OEM towbeam	T580 20 80
Spacer for outer fitting on DAF OEM towbeam	T580 20 90

Part number	T268 12 20	T268 20 10	T268 20 20	T268 20 25	T268 53 20(1)
Type	MV50				MV53
Slack adjustment	No	Yes			
Handle opening	Low	High	Low		
In-cab LED	Option				
Hole pattern (mm)	160 x 100 **OR** 260 x 100			160 x 100	160 x 100 **AND** 260 x 100
D (kN)	190	200		190	200
Dc (kN)	135	140		135	160
V (kN)	85	90		85	140
S (kg)	1 000				
Weight (kg)	32	55		50	55
Class	S				

(1) heavy-range coupling to be fitted on TFC-HD towbeams

01

MOUNTING DIMENSIONS

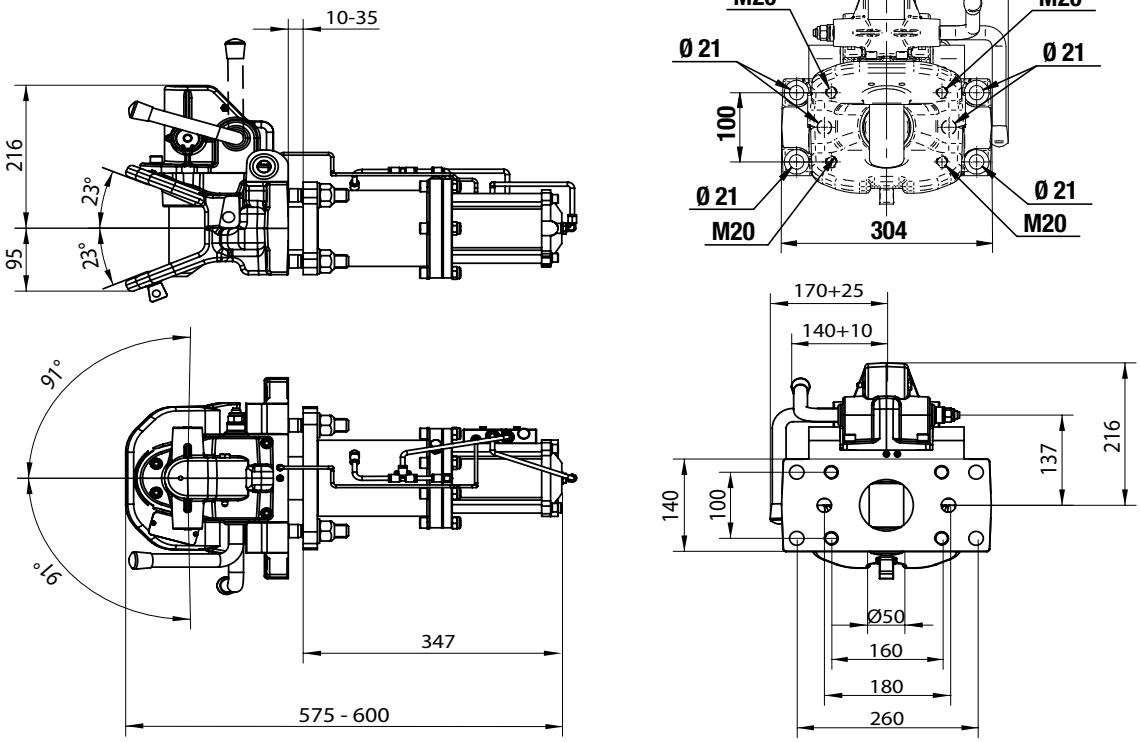

SPARE PARTS

AFTER-SALES SLACK ADJUSTMENT

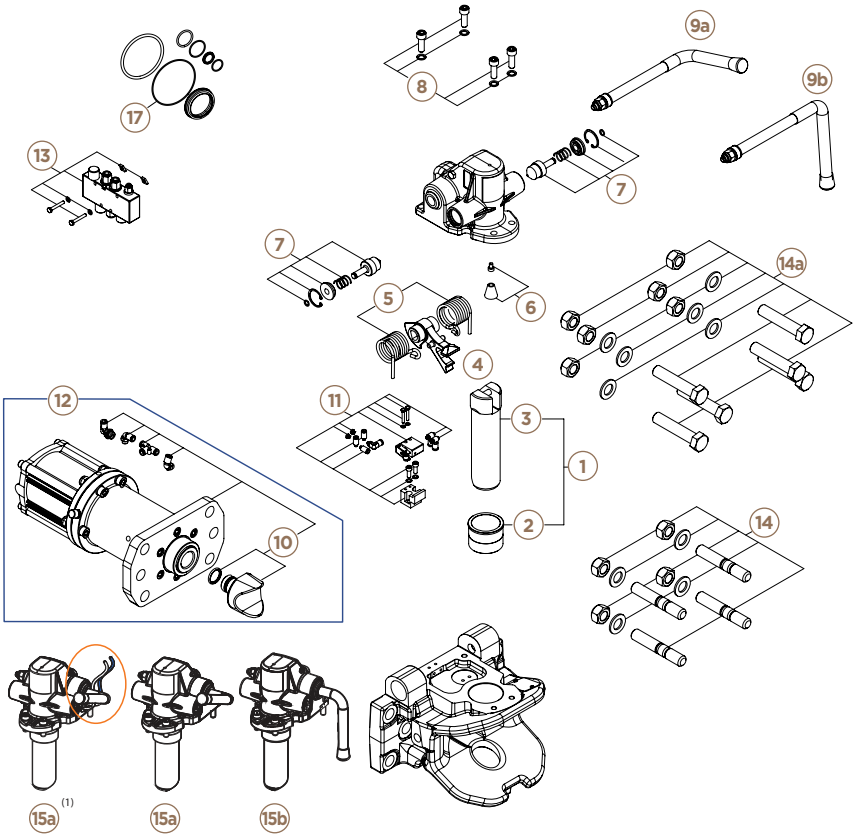

T152 04 61 T152 06 55 T152 06 56

	T268 20 10 (1) T268 20 20 (1) T268 20 25 (1)	T268 12 10	T268 20 10 T268 20 20 T268 20 25 T268 53 20
1	T152 04 54		
2	T152 04 55		
3	T152 04 56		
4	T152 04 58		
5	T152 01 78		
6	T152 00 91		
7	T152 01 81		
8	T152 04 59		T152 06 33
9a	T152 01 86		
9b	T152 05 61		
10	T152 04 60		T152 04 60
11	T152 04 62		T152 06 37
12	T152 06 38		
13	T152 06 39		
14	T152 05 06		
14a (2)			T152 06 45
15a	T152 04 61		T152 06 55
15b	T152 04 70		T152 06 56
17			T152 07 40

(1) in production until 12/2015 (2) screws included only for T268 53 20

BNA COUPLING
TRAXION WITH GUIDE

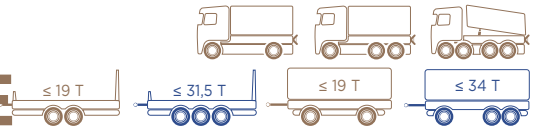



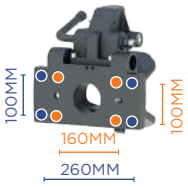

DOUBLE HOLE PATTERN
160x100 + 260x100
FOR RIGIDS
DAF - DAIMLER TRUCK - MAN - RENAULT TRUCKS SCANIA - VOLVO TRUCKS



SINGLE HOLE PATTERN
160X100
FOR RIGIDS
WITHOUT PLATE T580 20 90
IVECO

APPROVED **R55**

NEW



COUPLING HEAD PROTECTION



PROTECTIVE COVER

DESCRIPTION

- Simple, reliable and sturdy
- Comfort + safety: hydro-pneumatic slack adjustment (air / oil)
- Compact for installation on tippers and finishers
- Long guide with pre-cut for short model

- Fully automatic for safety
- Plates for fitting on all OEM towbeams

- Simplified maintenance with accessible grease nipples
- Mechanical safety indicators showing open / closed positions
- Supplied with studs for 160 x 100 fitting

Options	Part number
Coupling head protection	**T524 42 80**
Traxion cover for guide model Operating range -30°/+70°C Two-tone orange / black - Camera window with protective flap	**T522 15 80**
Screw set for 260 x 100 fitting only	**T152 06 45**
Spacer for inner fitting on MAN OEM towbeam	**T580 20 80**
Spacer for outer fitting on DAF OEM towbeam	**T580 20 90**

Part number	T268 50 10	T268 50 20	T268 50 25	T268 55 10(1)	T268 55 20(1)
Type	MV50			MV53	
Slack adjustment	Yes				
Handle opening	High	Low		High	Low
In-cab LED	Option				
Hole pattern (mm)	160 x 100 **OR** 260 x 100		160 x 100	160 x 100 **AND** 260 x 100	
D (kN)	190	200	190	200	
Dc (kN)	135	140	135	160	
V (kN)	85	90	85	140	
S (kg)	1 000				
Weight (kg)	65				
Class	S				

(1) heavy-range coupling to be fitted on TFC-HD towbeams

01

MOUNTING DIMENSIONS

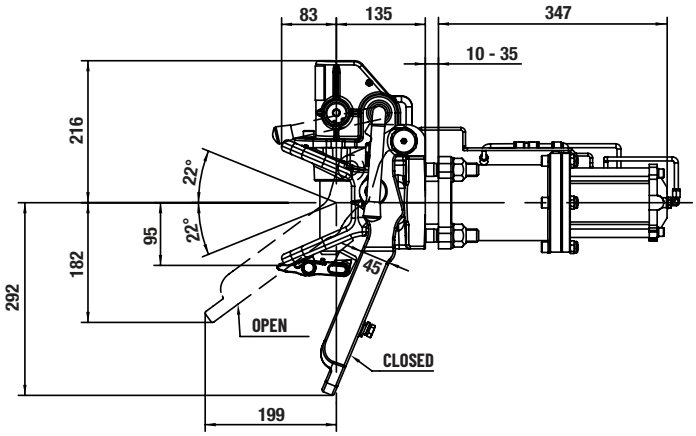

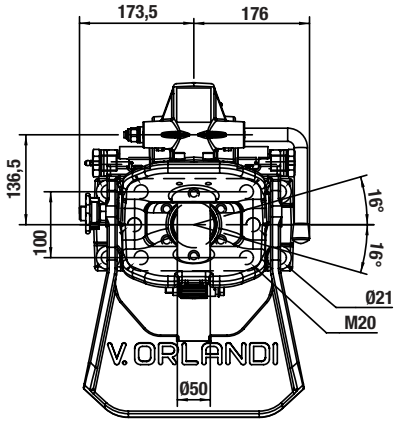

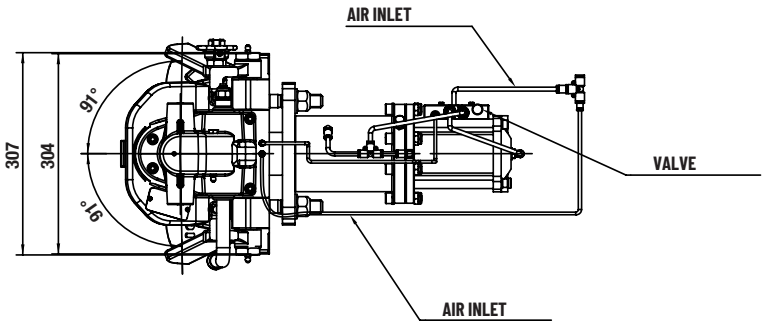

SPARE PARTS

AFTER-SALES SLACK ADJUSTMENT

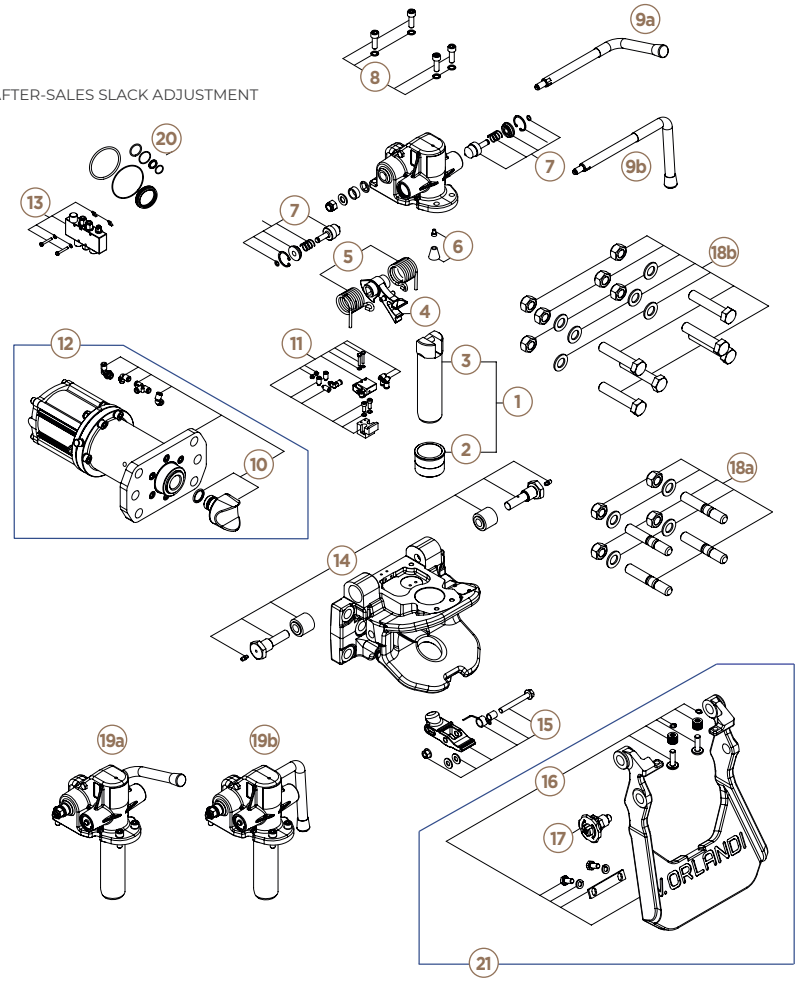

	Part number		Part number
1	T152 04 54	12	T152 06 38
2	T152 04 55	13	T152 06 39
3	T152 04 56	14	T152 06 40
4	T152 04 58	15	T152 06 41
5	T152 01 78	16	T152 07 55
6	T152 00 91	17	T152 03 35
7	T152 01 81	18a	T152 05 06
8	T152 06 33	18b (1)	T152 06 45
9a	T152 01 86	19a	T152 06 55
9b	T152 06 68	19b	T152 06 56
10	T152 04 60	20	T152 07 40
11	T152 06 37	21	T152 06 69

(1) screws included only for T268 55 10 and T268 55 20

BNA COUPLING
TRAXION PNEUMATIC

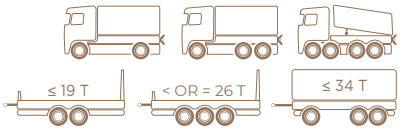

APPROVED R55

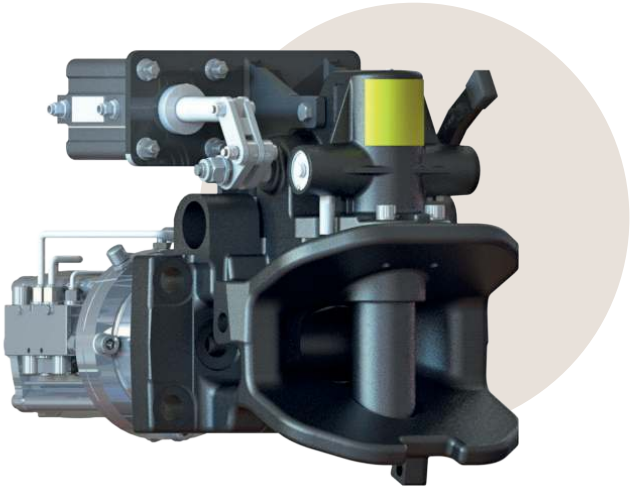



NEW



COUPLING HEAD PROTECTION



REMOTE OPENING BOX (CLOSED)

DESCRIPTION

- Simple and reliable for remote opening operations
- Comfort + safety: hydro-pneumatic slack adjustment (air / oil)
- Ultra-compact pneumatic remote opening for all low mountings
- Actuator in lockable aluminium box / 2 open/closed position LEDs
- Automatic locking
- Manual opening possible if air pressure fails
- Simplified maintenance with accessible grease nipples
- Supplied with studs for 160 x 100 fitting

Part number	T2682080	
	MV50	
Slack adjustment	Yes	
Remote opening	Air	
In-cab LED	Yes	
Hole pattern (mm)	160 x 100 **OR** 260 x 100	
D (kN)	190	200
Dc (kN)	135	140
V (kN)	85	90
S (kg)	1 000	
Weight (kg)	62	
Class	S	

Options	Part number
Coupling head protection	**T5244280**
Screw set for 260 x 100 fitting	**T1520645**
Pneumatic box bracket	**T5224050**

01

MOUNTING DIMENSIONS

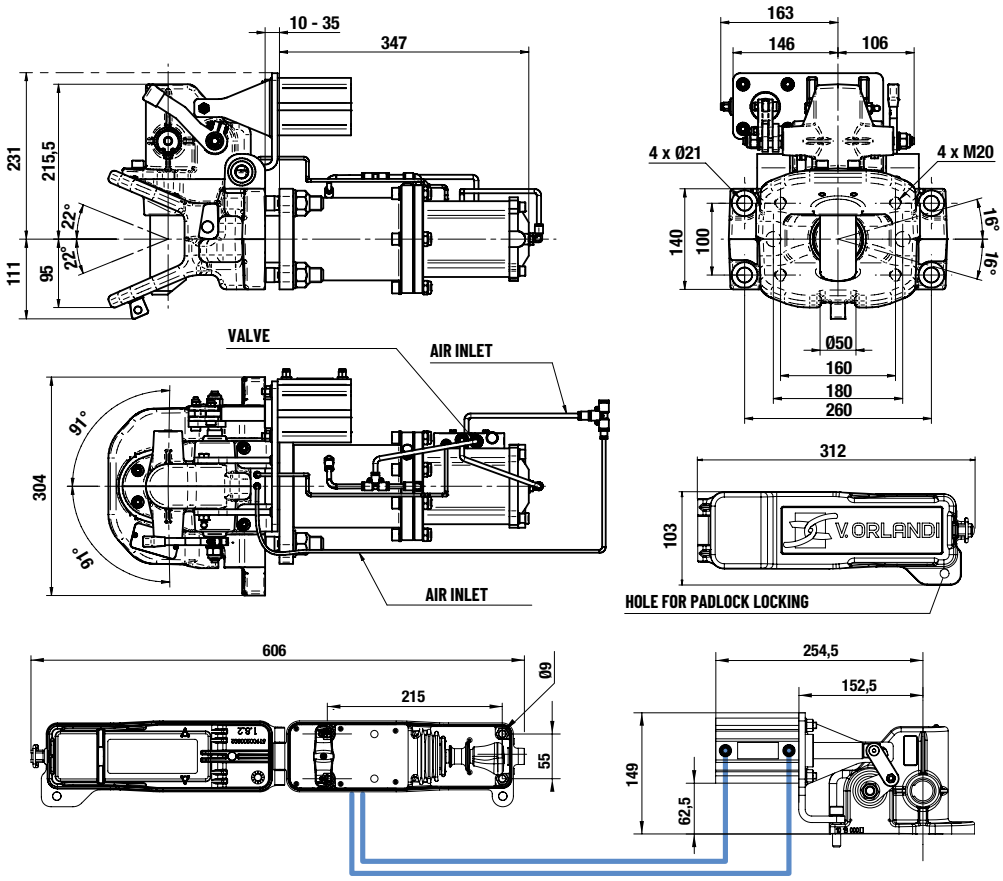

SPARE PARTS

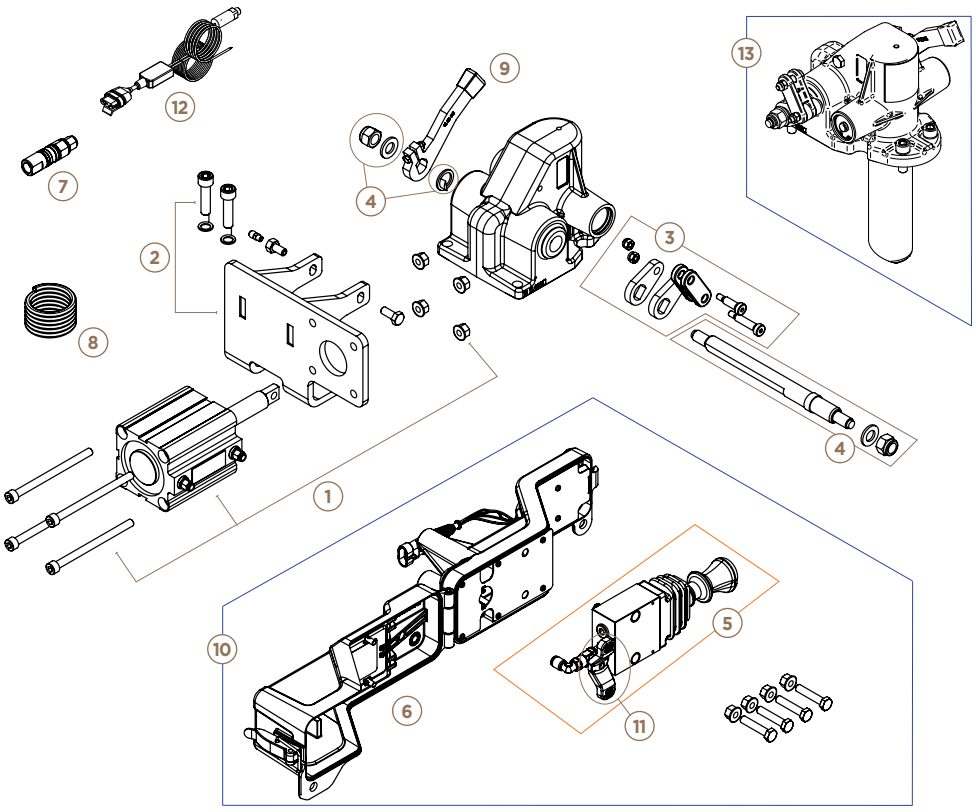

	Part number
1	T1520733
2	T1520734
3	T1520509
4	T1520735
5	T1520666
6	T1520667
7	T1520252
8	T1520251
9	T1520228
10	T1520664
11	T1520736
12	T1510011
13	T1520767

Note: the coupling spare parts are shown on the manual BNA coupling page

BNA COUPLING
TRAXION WITH CABLE

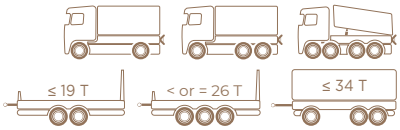

APPROVED R55

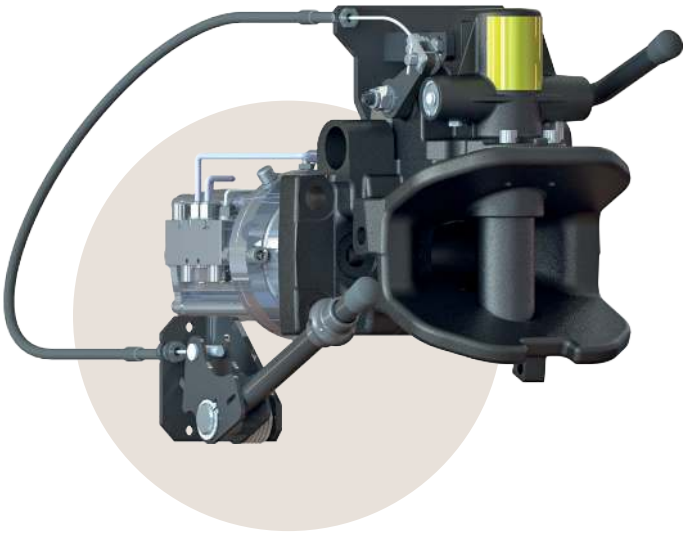

NEW



COUPLING HEAD PROTECTION

DESCRIPTION

- Simple and reliable for remote opening operations
- Comfort + safety: hydro-pneumatic slack adjustment (air / oil)
- 1.5 m remote cable opening with secure remote lever
- Automatic locking
- Simplified maintenance with accessible grease nipples
- Position sensor with in-cab LED
- Mechanical safety indicators showing open / closed positions
- Supplied with studs for 160 x 100 fitting

Part number	T2682042	
Type	**MV50**	
Slack adjustment	Yes	
Remote opening	Cable	
In-cab LED	Yes	
Hole pattern (mm)	160 x 100 **OR** 260 x 100	
D (kN)	190	200
Dc (kN)	135	140
V (kN)	85	90
S (kg)	1 000	
Weight (kg)	58	
Class	S	

Options	Part number
Coupling head protection	**T524 42 80**
Screw set for 260 x 100 fitting	**T152 06 45**

01

MOUNTING DIMENSIONS

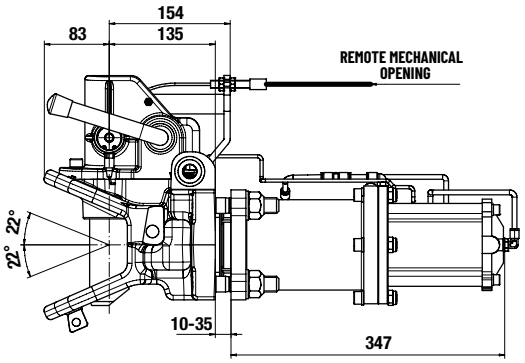

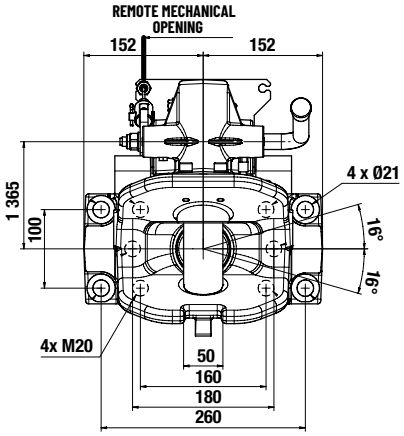

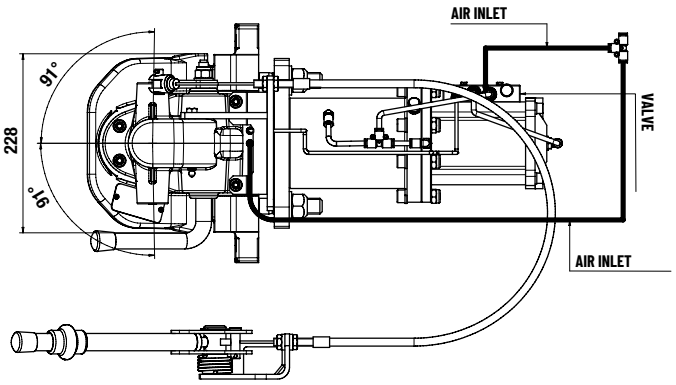

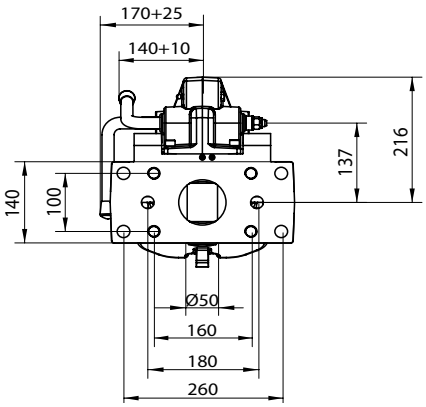

SPARE PARTS

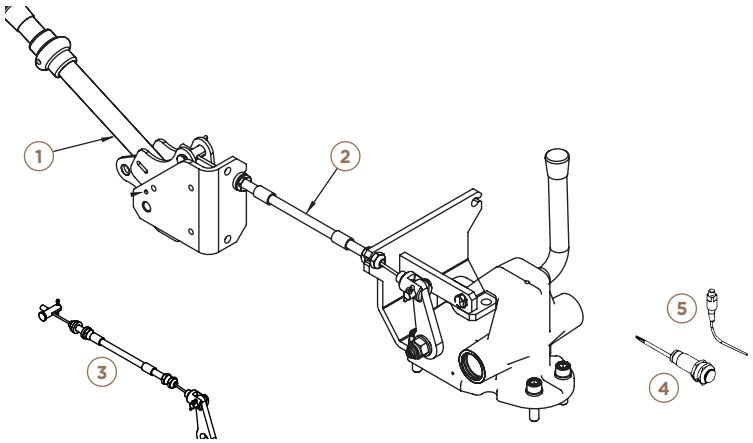

	Part number
1	T152 00 32
2	T152 71 00
3	T152 05 41
4	T151 00 19
5	T151 00 04

Complete kit T520 41 00

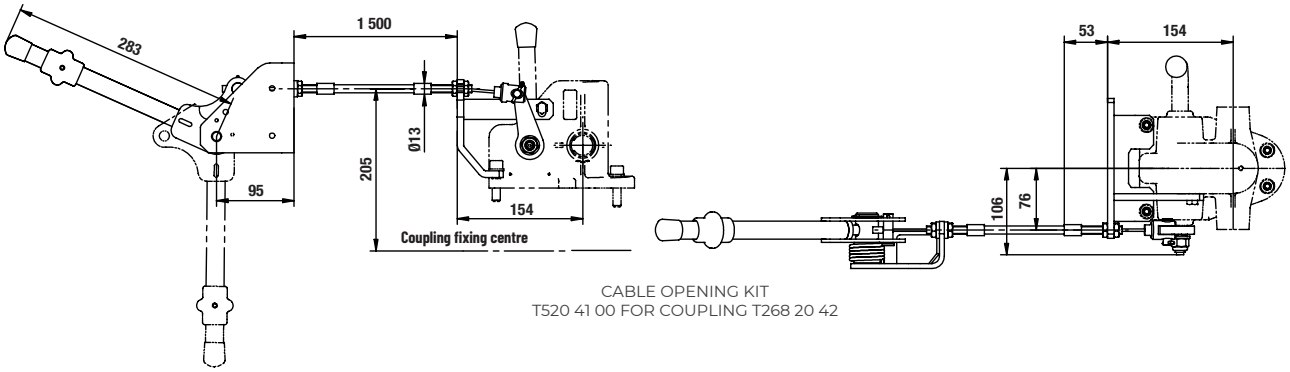

CABLE OPENING KIT
T520 41 00 FOR COUPLING T268 20 42

DIN50 COUPLING
MANUAL

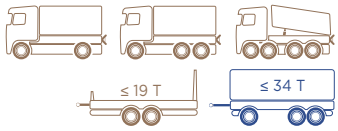

APPROVED R55





FOR DRAWBAR EYES DIN50

DESCRIPTION

- Easy to fit, simple to use
- A complete approved range
- Automatic locking
- Optional for greater safety:
  in-cab monitoring device
- Fitting on towbeams with hole patterns:
  - 120 x 55 mm (G135)
  - 140 x 80 mm (G145)
  - 160 x 100 mm (G150)
- Special versions for very heavy tonnages
- Optional screw set

Options	Part number
Coupling head protection	T524 42 80
Screw set M14	T152 01 30
Screw set M16	T152 01 31
Screw set M20	T152 01 32

Part number	T250 03 10	T250 03 20	T250 04 10(1)	T250 04 20(1)	T250 25 10	T250 25 20
Type	E50				E50	
Opening	High	Low	High	Low	High	Low
Hole pattern (mm)	120 x 55		140 x 80		160 x 100	
D (kN)	70		100		200	
Dc (kN)	50		70		135	
V (kN)	18		25		75 OR	50
S (kg)	650		900		1 000 OR	2 500
Weight (kg)	37		40		43	
Class	C50-3		C50-4		C50-X	
Screws	M14		M16		M20	

(1) Technical drawings and spare parts available on request

01

MOUNTING DIMENSIONS

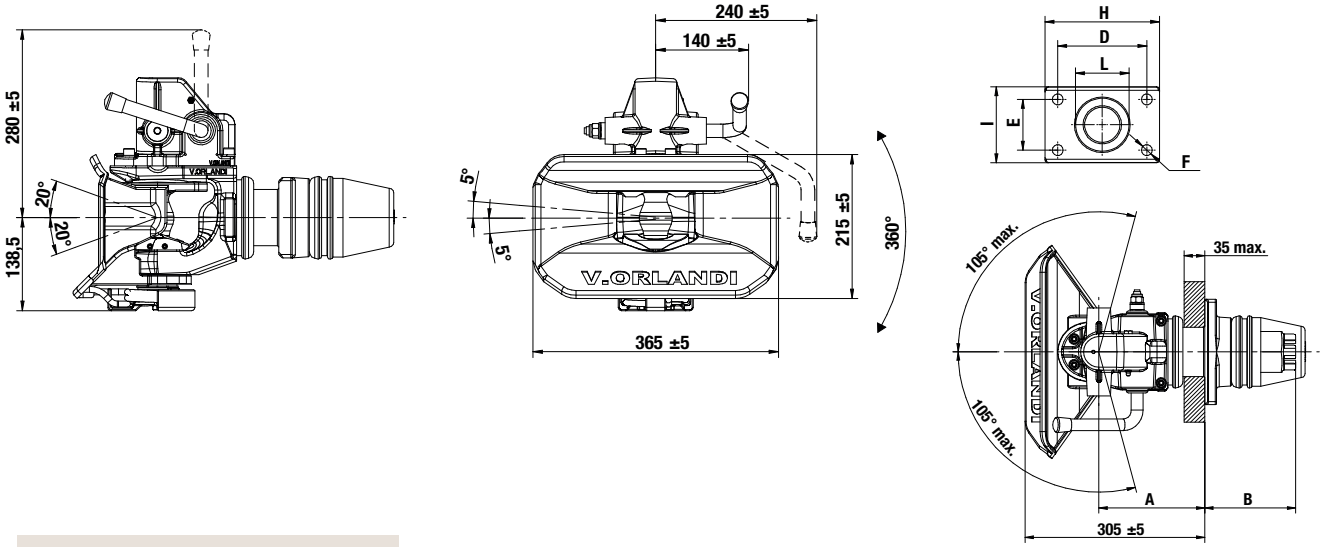

SPARE PARTS

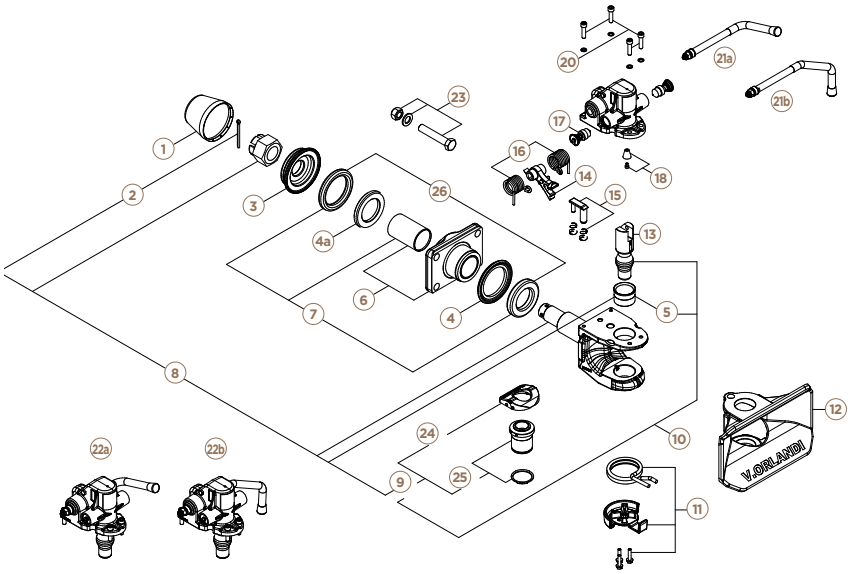

Model	A (mm)	B (mm)	C (mm)	D (mm)	E (mm)
T250 03 10 T250 03 20	171,5	151,5	448	120	55
T250 04 10 T250 04 20	175	148		140	80
T250 25 10 T250 25 20	178	140	443	160	100

Model	F (mm)	G (mm)	H (mm)	I (mm)	L (mm)
T250 03 10 T250 03 20	171,5	151,5	448	120	55
T250 04 10 T250 04 20	175	148		140	80
T250 25 10 T250 25 20	178	140	443	160	100

		T250 03 10 T250 03 20	T250 04 10 T250 04 20	T250 25 10 T250 25 20
1		T152 06 03		
2		T152 00 64		
3		T152 00 76	T152 01 75	T152 06 22
4		T152 07 71	T152 07 70	T152 01 73
4a				T152 06 88
5		T152 06 04		
6		T152 07 72	T152 01 95	T152 06 17
7		T152 02 17	T152 01 83	T152 06 18
8	(2, 5, 9)	T152 07 73		T152 06 07
9	(24, 25)	T152 06 09		
10	(5, 9, 13)	T152 06 25		
11		T152 05 29		
12	(2)	T152 09 98		
13		T152 06 19		

		T250 03 10 T250 03 20	T250 04 10 T250 04 20	T250 25 10 T250 25 20
14		T152 01 88		
15		T152 01 79		
16		T152 01 78		
17		T152 01 81		
18		T152 00 91		
20		T152 01 85		
21a		T152 01 86		
21b		T152 01 87		
22a		T152 06 20		
22b		T152 06 21		
23	(1)	T152 01 30	T152 01 31	T152 01 32
24	(1)	T152 06 14		
25		T152 06 11		
26		T152 01 65	T152 02 27	T152 06 49

(1) Not included with the coupling (2) Reinforced bell mouth

DIN50 COUPLING
PNEUMATIC

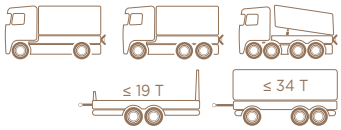

APPROVED R55

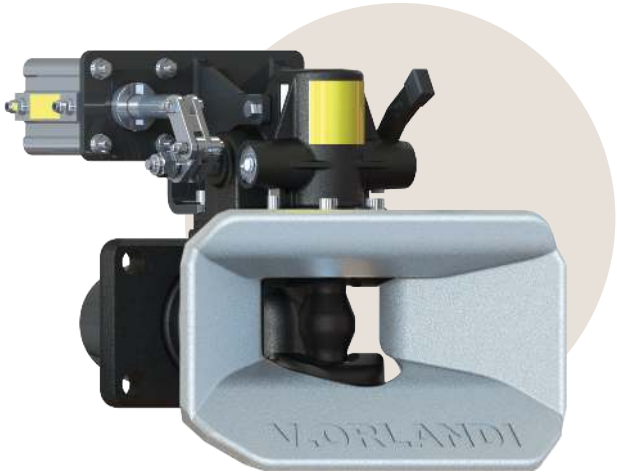





FOR DRAWBAR EYES DIN50



REMOTE OPENING BOX (CLOSED)

NEW

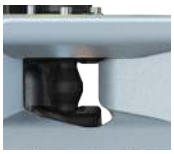

REINFORCED BELL MOUTH

DESCRIPTION

- Easy to fit, simple to use
- Ultra-compact pneumatic remote opening for all low mountings
- Automatic locking
- Lockable aluminium box with actuator and 2 open/closed position LEDs
- Reinforced galvanised steel bell mouth
- Simplified maintenance with accessible grease nipples
- Manual opening possible if air pressure fails
- Optional screw set

Part number	T2502582	
Type	E525	
Opening	Air	
In-cab LED	Yes	
Hole pattern (mm)	160 x 100	
D (kN)	200	
Dc (kN)	135	
V (kN)	75	50
S (kg)	1 000	2 500
Weight (kg)	42	
Class	C50-X	
Screws	M20	

Options	Part number
Coupling head protection	T524 42 80
Pneumatic box bracket	T522 40 50
Screw set M20	T152 01 32

01

MOUNTING DIMENSIONS

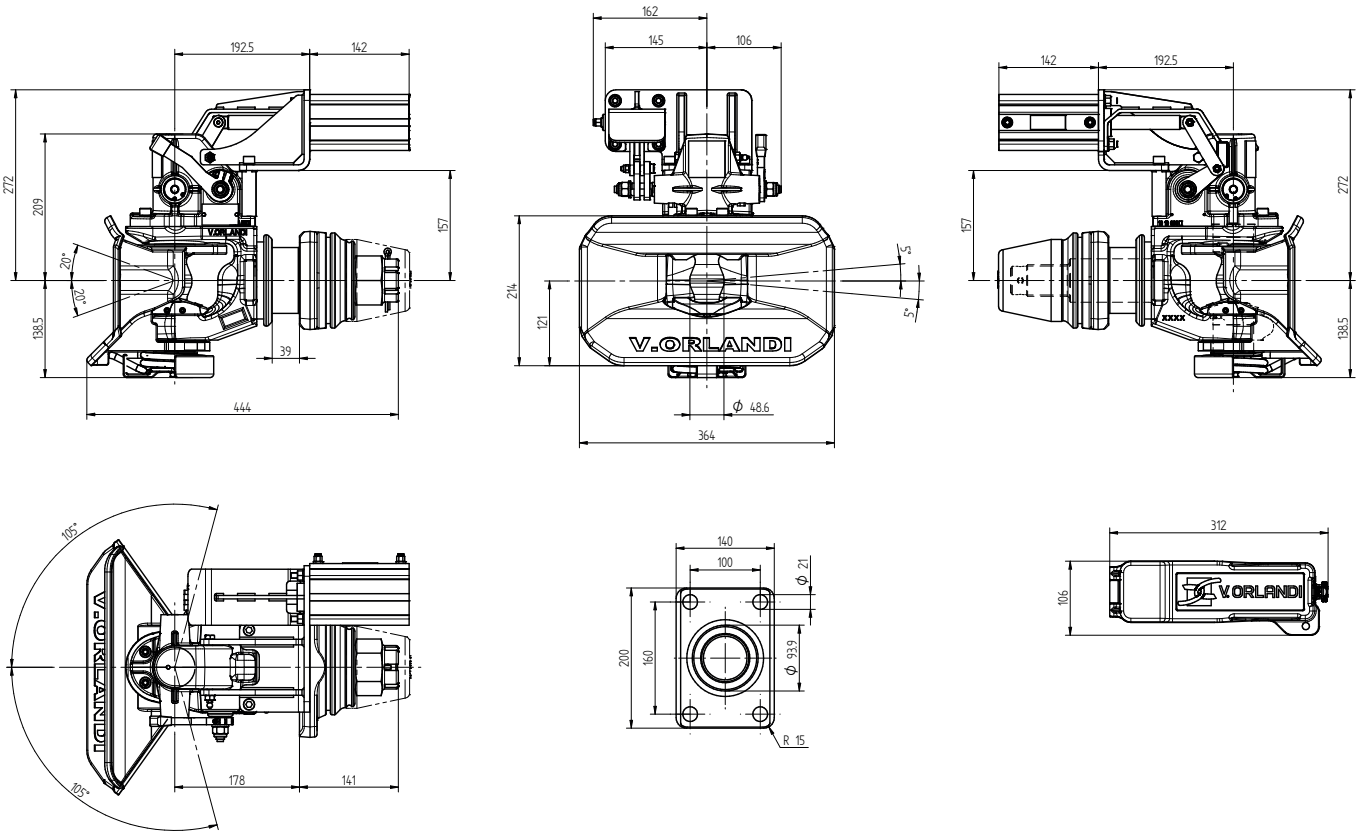

SPARE PARTS

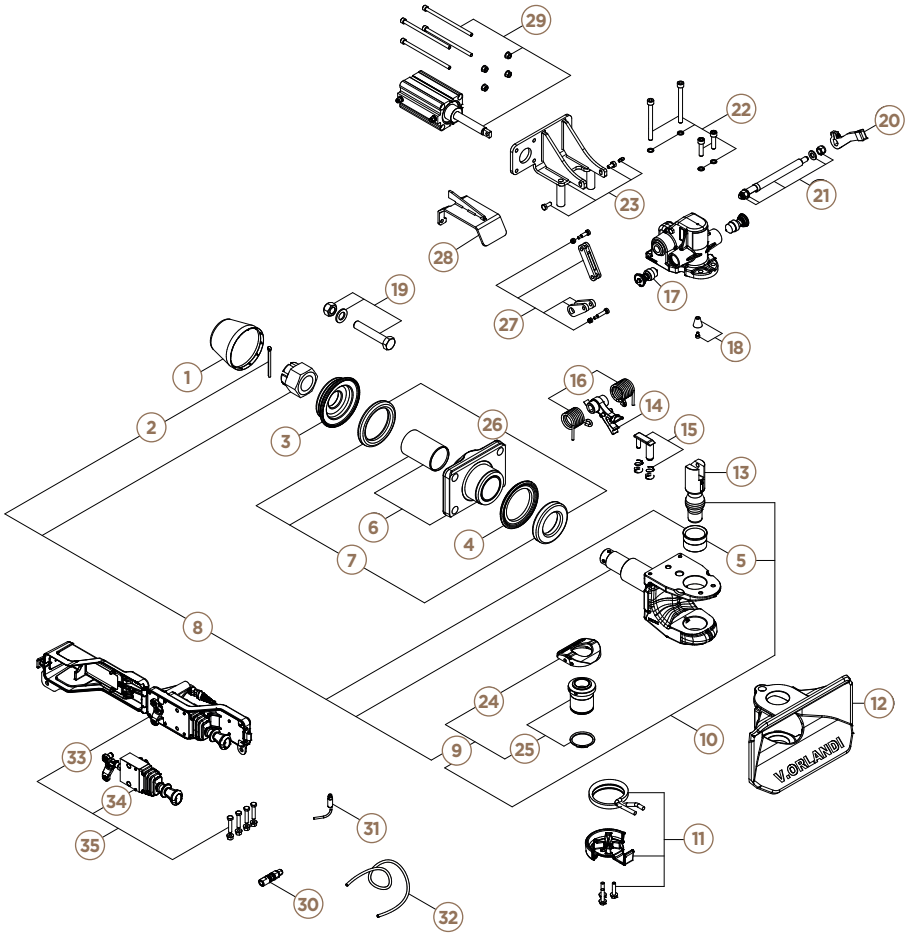

	Part number		Part number
1	T152 06 03	19	T152 01 32
2	T152 00 64	20	T152 02 28
3	T152 06 22	21	T152 07 35
4	T152 01 73	22	T152 08 04
5	T152 06 04	23	T152 08 05
6	T152 06 17	24	T152 06 12
7	T152 06 18	25	T152 06 11
8	T152 06 07	26	T152 06 49
9	T152 06 09	27	T152 08 06
10	T152 06 25	28	T152 08 07
11	T152 05 29	29	T152 08 08
12	T152 01 93	30	T152 02 52
13	T152 06 19	31	T152 00 11
14	T152 01 88	32	T152 02 51
15	T152 01 79	33	T152 06 67
16	T152 01 78	34	T152 06 66
17	T152 01 81	35	T152 06 64
18	T152 00 91		

DIN50 COUPLING
WITH CABLE

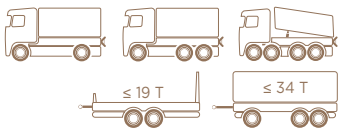

APPROVED R55

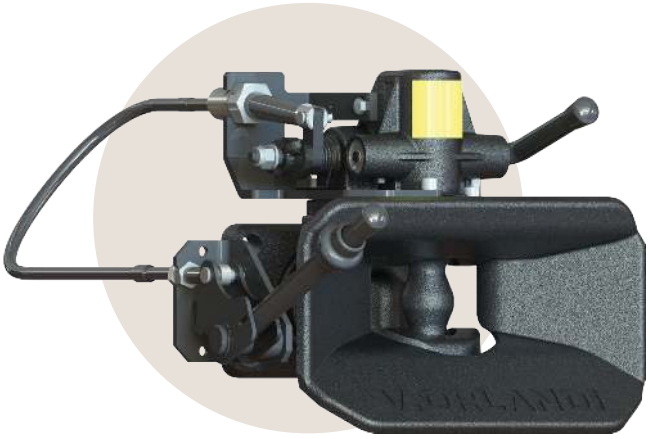



FOR DRAWBAR EYES DIN50

DESCRIPTION

- Easy to fit and use
- Simple, reliable and cost-effective
- 1.5 m remote cable opening with secure remote lever
- Automatic locking
- Easier maintenance: accessible grease nipples
- Position sensor with in-cab LED
- Mechanical safety indicators showing open / closed positions
- Optional screw set

Part number	T250 25 42	
Type	**E509**	
Opening	Cable	
In-cab LED	Yes	
Hole pattern (mm)	160 x 100	
D (kN)	200	
Dc (kN)	135	
V (kN)	75	50
S (kg)	1 000	2 500
Weight (kg)	42	
Class	C50-X	
Screws	M20	

Options	Part number
Coupling head protection	**T524 42 80**
Remote cable opening system for T250 25 42	**T520 42 00**
Screw set M20	**T152 01 32**

01

MOUNTING DIMENSIONS

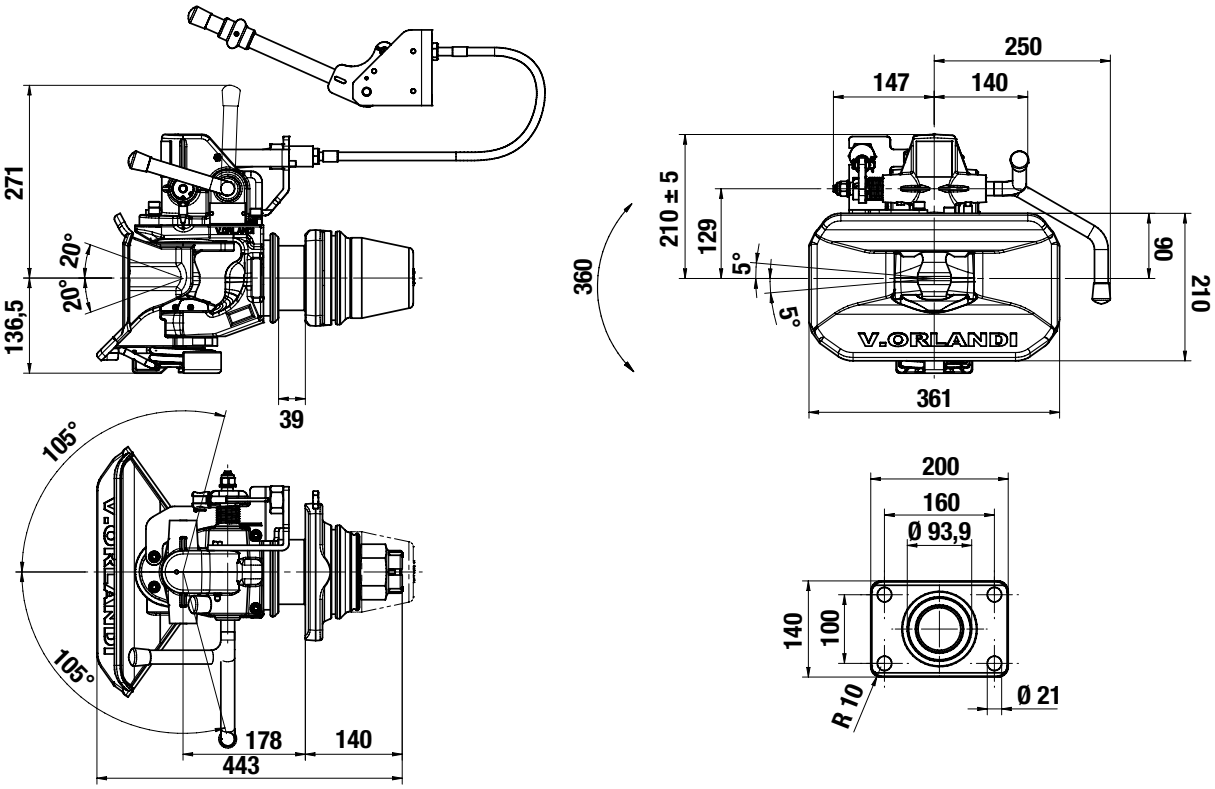

SPARE PARTS

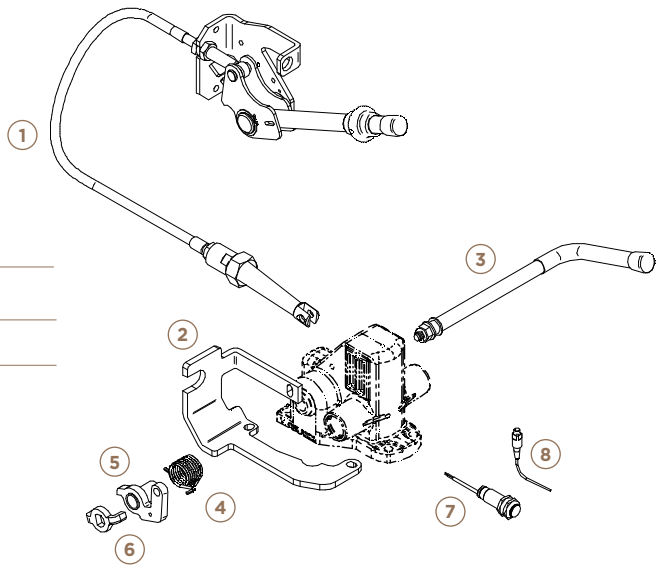

Part number	
1	T1520410
2	T1520717
3	T1520406
4	T1520407
5	T1520409
6	T1520408
7	T1510019
8	T1510004

Complete kit T520 42 00

After-sales cable opening	
Cable length (mm) + crimped end fittings	Part number
1500	T1580103

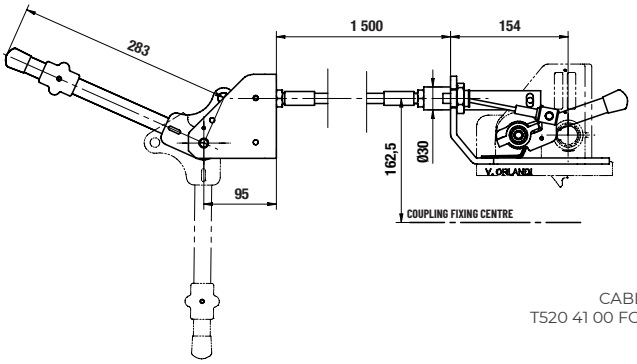

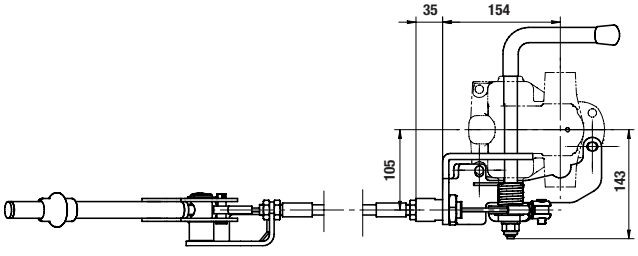

CABLE OPENING KIT
T520 41 00 FOR COUPLING T268 20 42

DIN40 COUPLING
MANUAL

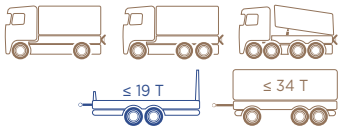

APPROVED R55





FOR DRAWBAR EYES DIN40

DESCRIPTION

- Easy to fit, simple to use
- A complete approved range
- Manual opening
- For greater safety, in-cab monitoring device (optional)
- Fitting on towbeams with hole patterns:
  - 120 x 55 mm (G135)
  - 140 x 80 mm (G145)
  - 160 x 100 mm (G150)
- Optional screw set

Options	Part number
Screw set M14	**T152 01 30**
Screw set M16	**T152 01 31**
Screw set M20	**T152 01 32**

Part number	T240 30 10	T240 30 20	T240 40 10	T240 40 20	T240 60 10	T240 60 20
Type	E403		E404		E406	
Opening	High	Low	High	Low	High	Low
Hole pattern (mm)	120 x 55		140 x 80		160 x 100	
D (kN)	70		110		150	
Dc (kN)	70		92		100	
V (kN)	28		38		42	
S (kg)	700		1 000		1 000	
Weight (kg)	34		35,5		37,5	
Class	S					
Screws	M14		M16		M20	

01

MOUNTING DIMENSIONS

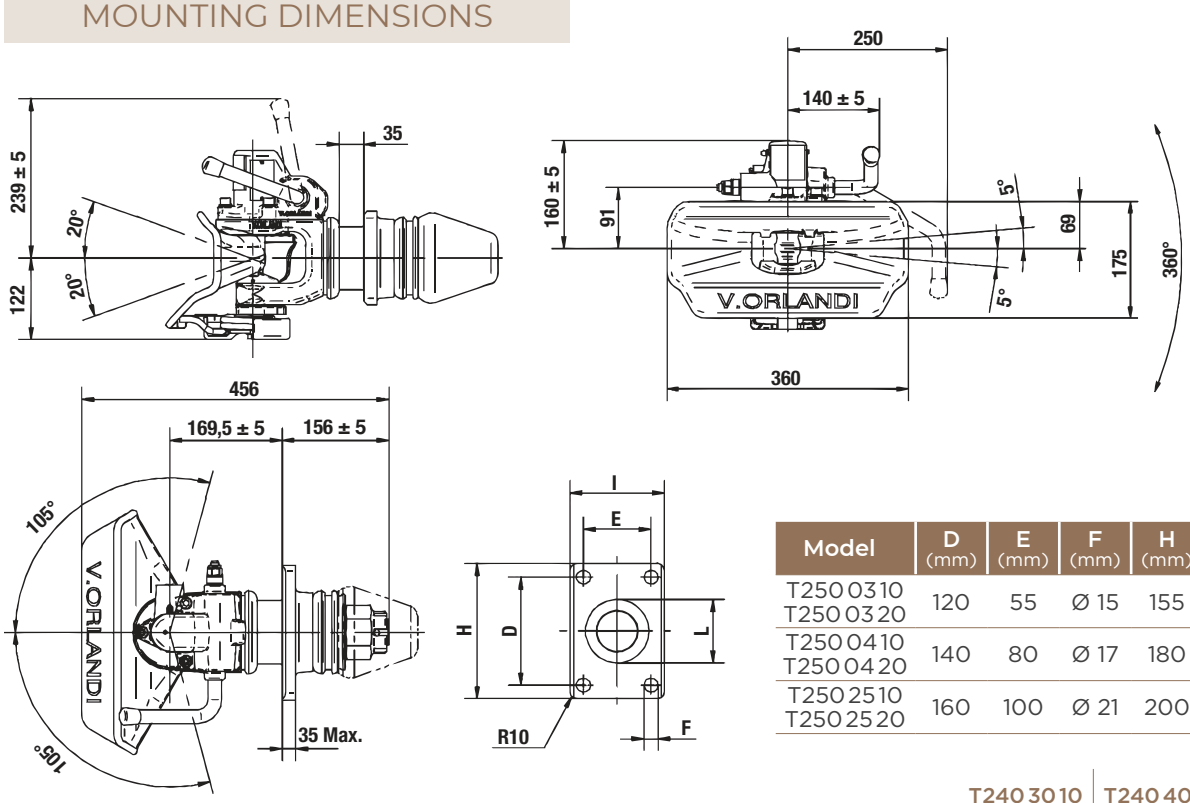

Model	D (mm)	E (mm)	F (mm)	H (mm)	I (mm)	L (mm)
T250 03 10 T250 03 20	120	55	Ø 15	155	90	Ø 73,9
T250 04 10 T250 04 20	140	80	Ø 17	180	120	Ø 83,9
T250 25 10 T250 25 20	160	100	Ø 21	200	140	Ø 93,9

SPARE PARTS

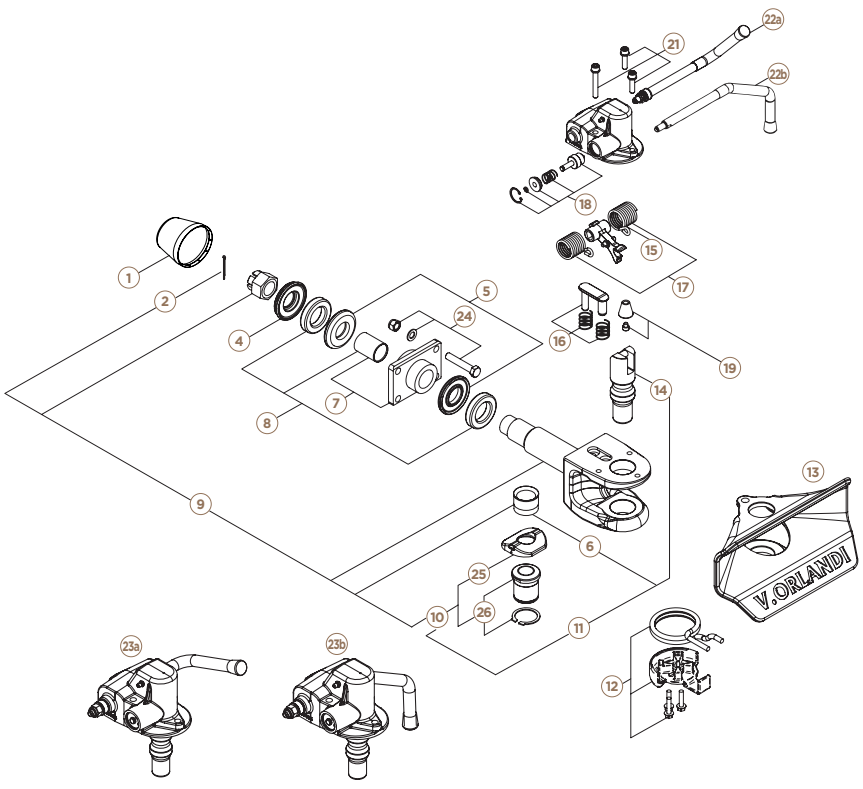

	T240 30 10 T240 30 20	T240 40 10 T240 40 20	T240 60 10 T240 60 20 T240 60 90
1	T152 06 03		
2	T152 00 64		
4	T152 00 76	T152 01 75	
5	T152 02 16	T152 01 89	
6	T152 01 49		
7	T152 01 82	T152 01 95	T152 01 92
8	T152 02 17	T152 01 83	
9	T152 04 94		
10	T152 04 95		
11	T152 03 03		
12	T152 05 29		
13	T152 03 04		
14	T152 03 05		
15	T152 03 06		
16	T152 03 07		
17	T152 03 08		
18	T152 03 09		
19	T152 03 10		
21	T152 03 12		
22a	T152 01 86		
22b	T152 01 87		
23a	T152 03 13		
23b	T152 03 14		
24 (1)	T152 01 30	T152 01 31	T152 01 32
25	T152 03 15		
26	T152 04 98		

(1) Not included with the coupling

DIN40 COUPLING
MANUAL WITH PLATE

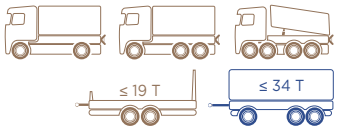

APPROVED R55





FOR DRAWBAR EYES DIN40

NEW

DESCRIPTION

- Easy to fit, simple to use
- A complete approved range
- Manual opening
- For greater safety, in-cab monitoring device (optional)
- Fitting on towbeams with hole patterns:
  - 120 x 55 mm (G135)
  - 140 x 80 mm (G145)
- Optional screw set

Options	Part number
Screw set M14	**T152 01 30**
Screw set M16	**T152 01 31**

Part number	T240 70 10	T240 70 20	T240 80 10	T240 80 20
Type	E403		E404	
Opening	High	Low	High	Low
Hole pattern (mm)	120 x 55		140 x 80	
D (kN)	70		110	
Dc (kN)	70		92	
V (kN)	28		38	
S (kg)	700		1 000	
Weight (kg)	29		29	
Class	S			
Screws	M14		M16	

01

MOUNTING DIMENSIONS

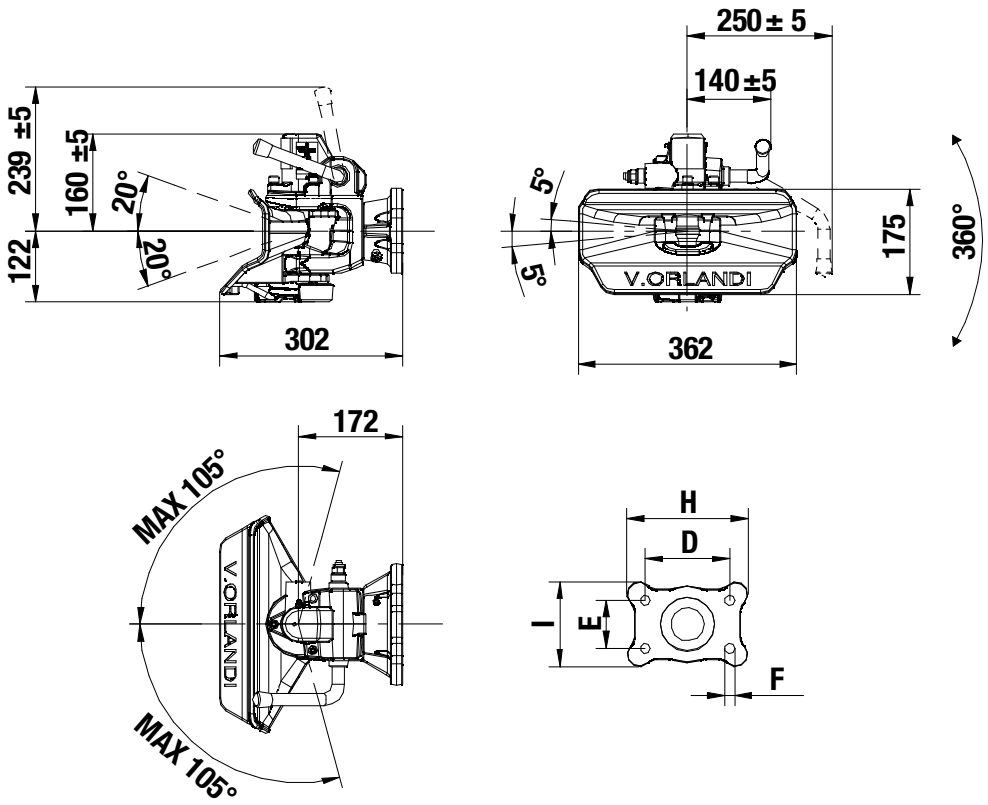

SPARE PARTS

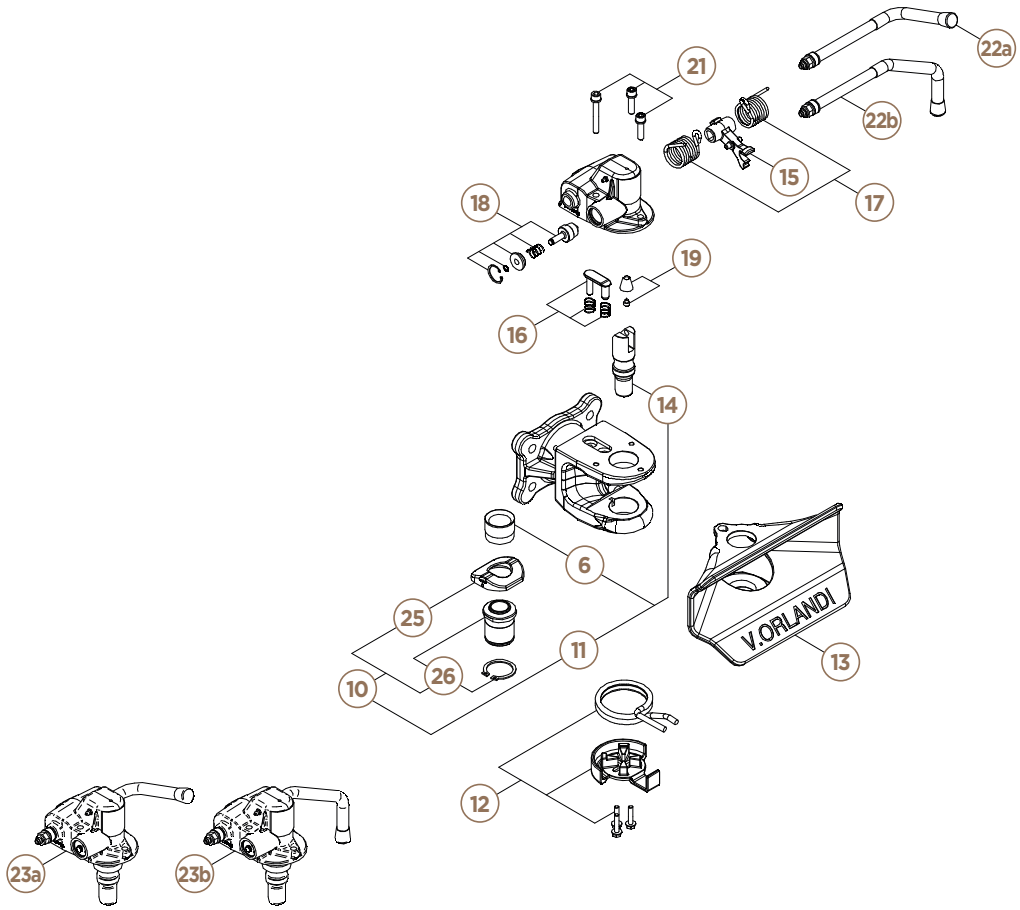

	Part number
6	T1520149
10	T1520495
11	T1520303
12	T1520529
13	T1520304
14	T1520305
15	T1520306
16	T1520307
17	T1520308
18	T1520309
19	T1520310
21	T1520312
22a	T1520186
22b	T1520187
23a	T1520313
23b	T1520314
25	T1520315
26	T1520498

TOWING
CLEVIS





FOR BNA, NATO, DIN40, DIN50 AND AGRICULTURAL DRAWBAR EYES

DESCRIPTION

- **Only for towing with a tow bar or cable**

- Supplied with cataphoresis coating
- Ø 35 mm pin
- Very high towing capacities
- Pin with retaining chain for the safety pin
- A complete range to meet all needs

Part number	T2100510	T2100520	T2100530
Hole pattern (mm)	120 x 55	140 x 80	160 x 100
Screws	M14	M16	M20
Towing capacity (T)	25	35	50
Max. GCW of rigid vehicle (T)	50	70	120
Weight (kg)	4,2	6	7

Options	Part number
Screw set M14	**T152 01 30**
Screw set M16	**T152 01 31**
Screw set M20	**T152 01 32**

01

MOUNTING DIMENSIONS

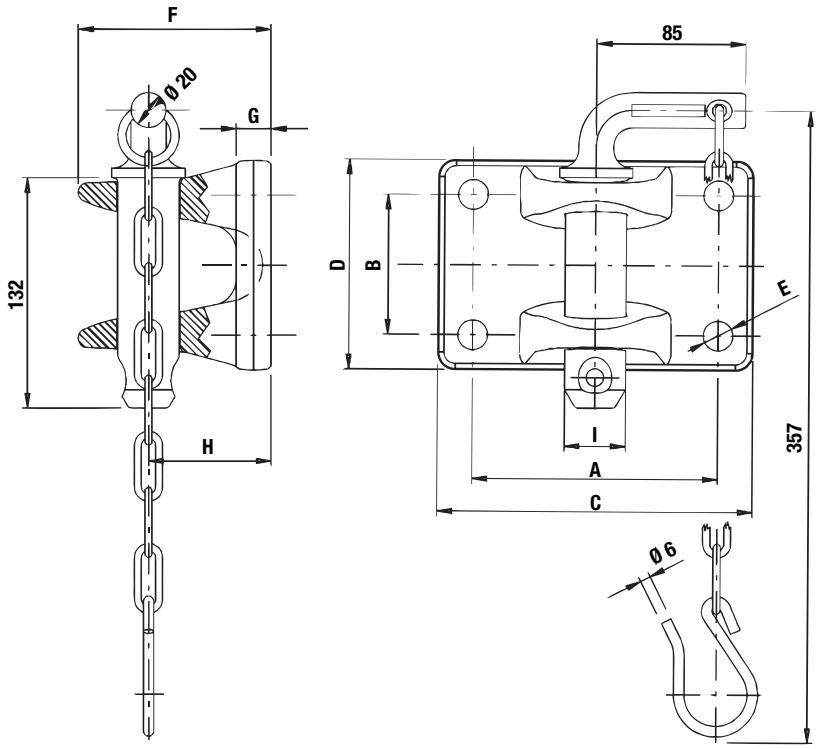

Model	A (mm)	B (mm)	C (mm)	D (mm)	E (mm)
T210 05 10	120	55	155	90	Ø 15
T210 05 20	140	80	180	120	Ø 17
T210 05 30	160	100	200	140	Ø 21

Model	F (mm)	G (mm)	H (mm)	I (mm)
T210 05 10	102	15	70	Ø 35
T210 05 20	110	20		
T210 05 30				

SPARE PARTS

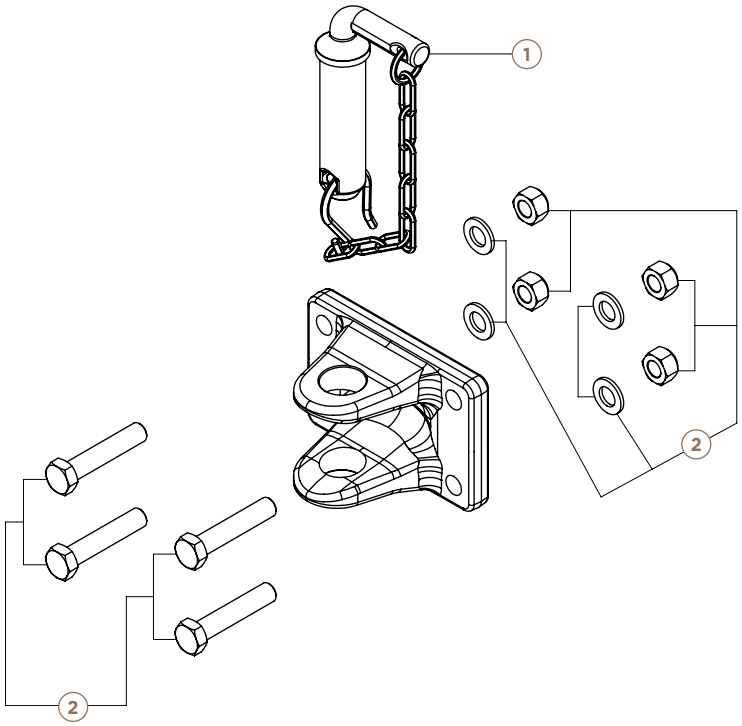

	T210 05 10	T210 05 20	T210 05 30
1	T152 02 19		
2	T152 01 30(1)	T152 01 31(1)	T152 01 32(1)

(1) Not included with the clevis

BALL-AND-SOCKET **COUPLING**

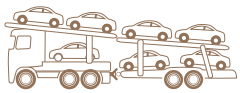

APPROVED **R55**

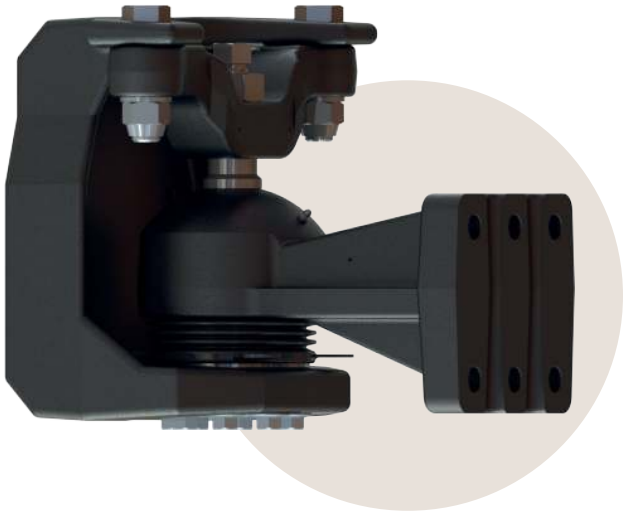



LED
T1510003



HARNESS WITH
INDUCTIVE SENSOR
T1510017



SCREWS + FIXING
T1510018

DESCRIPTION

- For very high-capacity ball coupling systems
- Permanently coupled combinations such as car transporters, caravan transporters or mobile homes
- Simple installation, precise adjustment
- Reduced maintenance: grease nipples, bronze cup
- Very long service life
- Comfortable, jolt-free driving
- Cataphoresis coating
- Screw set supplied

Part number	T2901100	
Type	GS900	
Hole pattern (mm)	160 x 100	
D (kN)		
Dc (kN)	145	
V (kN)	110	90
S (kg)	1 000	2 500
Weight (kg)	86	
Class	T	

Options	Part number
Steering angle sensor kit	**T5204250**
LED	**T1510003**
Harness with inductive sensor	**T1510017**
Screws + fixing	**T1510018**

01

MOUNTING DIMENSIONS

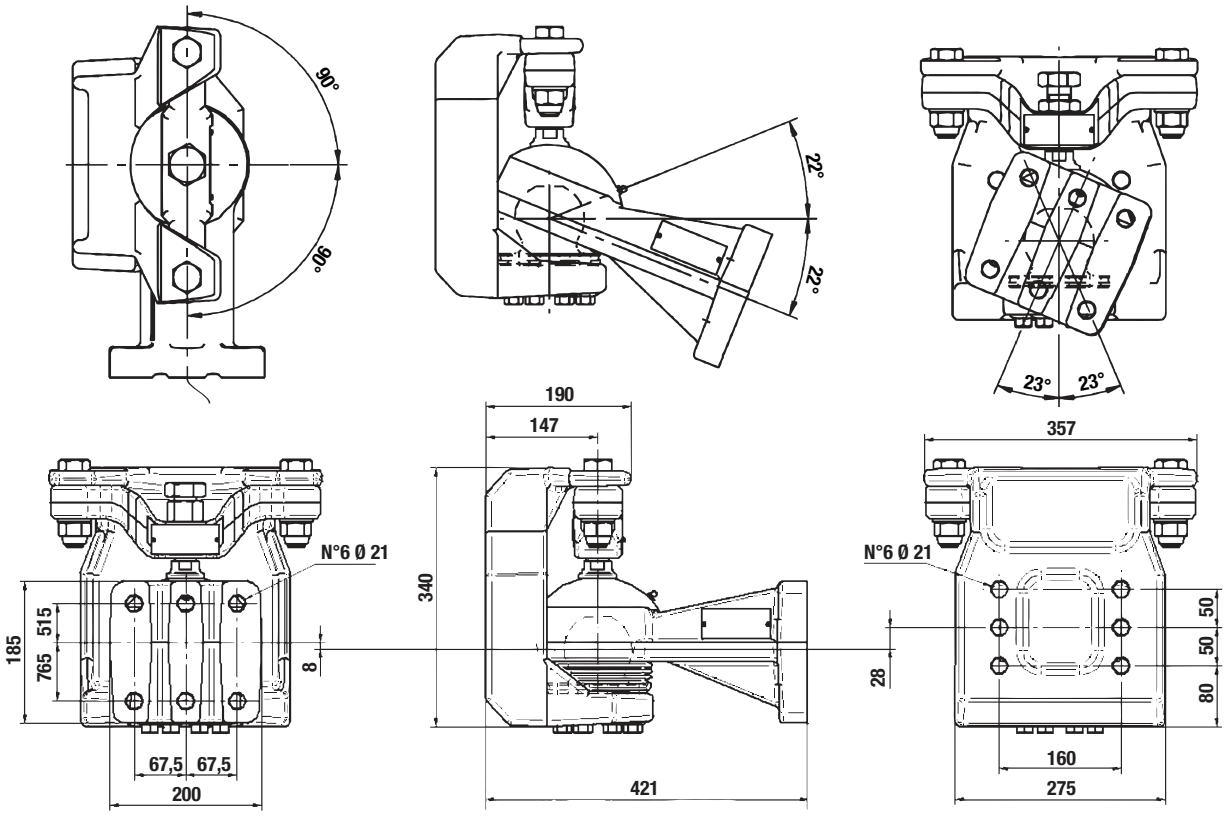

SPARE PARTS

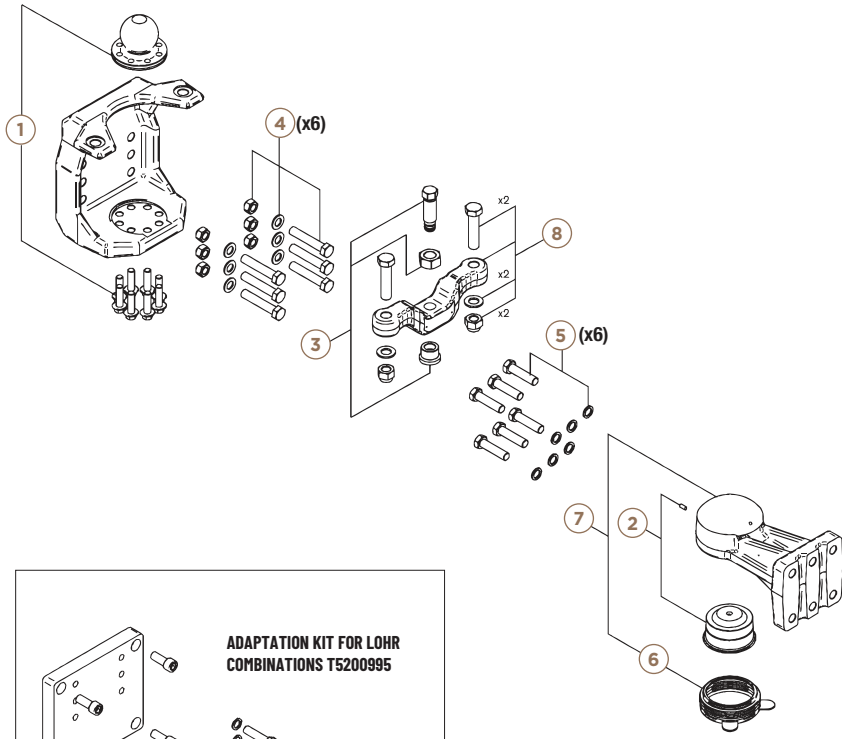

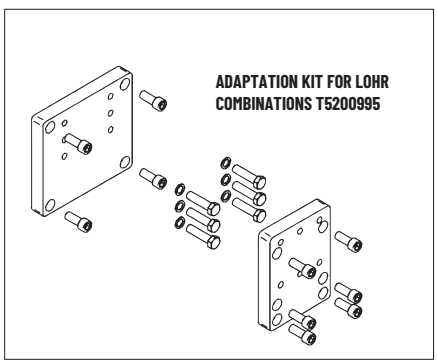

	Part number
1	T1520467
2	T1520323
3	T1520468
4	T1520325
5	T1520326
6	T1520327
7	T1520439
8	T1520469
3 + 8	T1520489

Complete kit T290 11 00

NATO
COUPLING

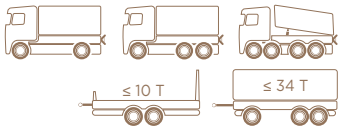

APPROVED R55





FOR DRAWBAR EYES NATO

DESCRIPTION

- Approved to NATO standard
- Swivelling, cushioned hook
- A true ally in theatres of operation worldwide
- Simple, reliable and sturdy
- Double-articulated opening
- Easy to maintain

Part number	T2766300	T2766400	T2766600
Type	UN963	UN964	UN966
Hole pattern (mm)	120 x 55	140 x 80	160 x 100
D (kN)	70	100	190
Dc (kN)	54	70	103
V (kN)	18	25	50
S (kg)	700	900	1 500
Weight (kg)	27		38
Class	KA1	KA2	KA3

01

MOUNTING DIMENSIONS

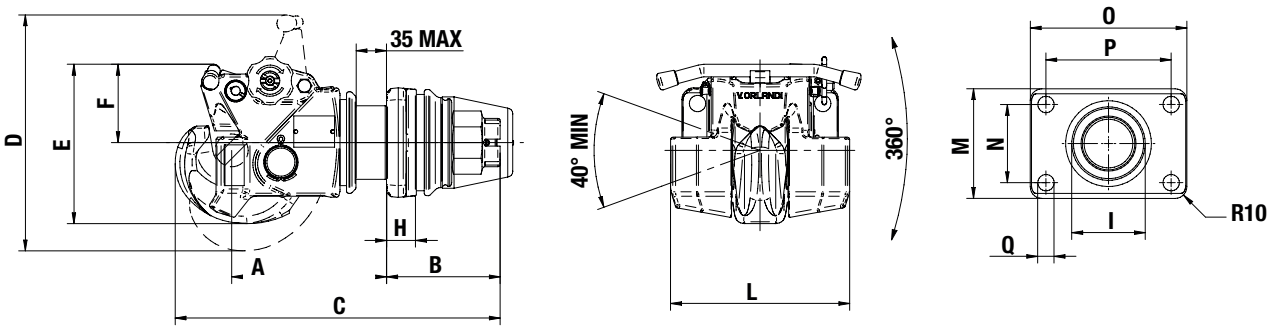

Model	A (mm)	B (mm)	C (mm)	D (mm)	E (mm)	F (mm)	G (mm)	H (mm)	I (mm)	L (mm)	M (mm)	N (mm)	O (mm)	P max. (mm)	Q (mm)
T210 05 10	184	160	410	258	186	93	13	20	73,9	190	90	55	155	120	15
T210 05 20	179	165							83,9		120	80	180	140	17
T210 05 30	197	145	200	140	Ø 21	Ø 21	Ø 21	Ø 21	93,9	Ø 21	140	100	200	160	21

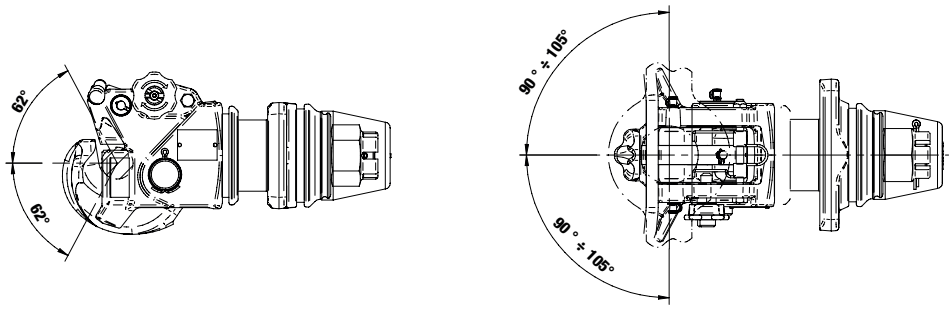

SPARE PARTS

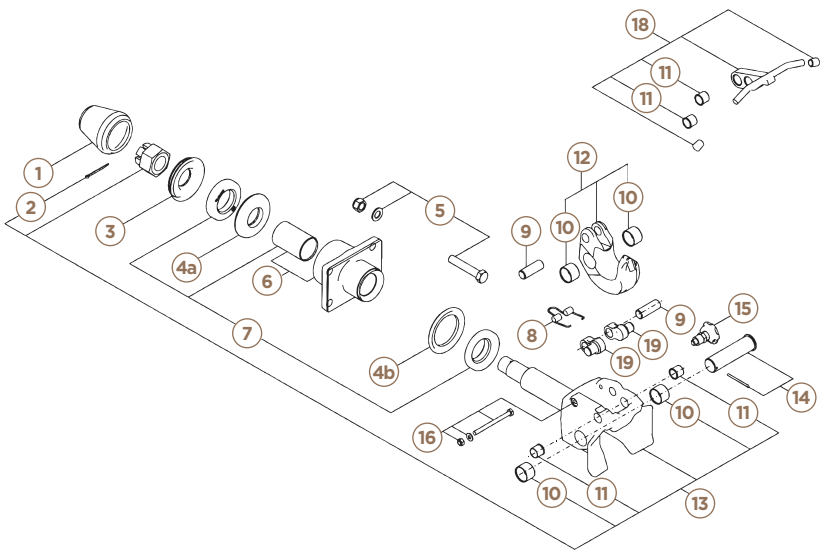

	T276 63 00	T276 64 00	T276 66 00
1	T152 06 03		
2	T152 00 64		
3	T152 00 76	T152 01 75	T152 06 22
4a	T152 02 16	T152 01 89	
4b			T152 01 73
5	T152 01 30(1)	T152 01 31(1)	T152 01 32(1)
6	T152 01 82	T152 01 95	T152 06 17
7	T152 02 17	T152 01 83	T152 06 18
8	T152 04 71		T152 03 39
9	T152 04 72		T152 03 31
10	T152 04 73		T152 03 32
11	T152 04 74		T152 03 33
12	T152 04 75		T152 03 41
13	T152 06 47		T152 06 46
14	T152 04 76		T152 03 34
15	T152 03 35		
16	T152 04 77		T152 03 36
18	T152 04 78		T152 03 45
19	T152 04 79		T152 03 37

(1) Not included with the coupling

DIN50 COUPLING
FOR EXCEPTIONAL LOADS



APPROVED R55

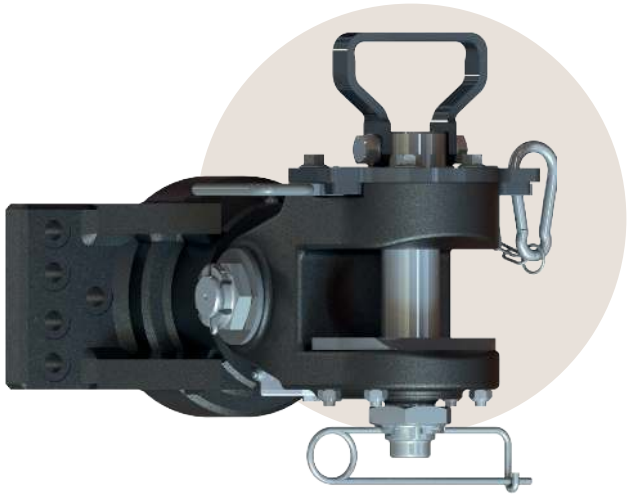



FOR DRAWBAR EYES
T4502040



FOR TOWBEAMS
TFC-UHD

DESCRIPTION

- For exceptional loads, pulling / pushing
- Manual locking
- Articulated head
- For trailers up to 250 T
- R55 approved for road use
- Optional screw set T152 07 68

Part number	T2954000
Type	HD5F S
Hole pattern (mm)	280 x 140
D (kN)	400
Towing capacity (T)	250
Weight (kg)	72,5
Class	S

01

MOUNTING DIMENSIONS

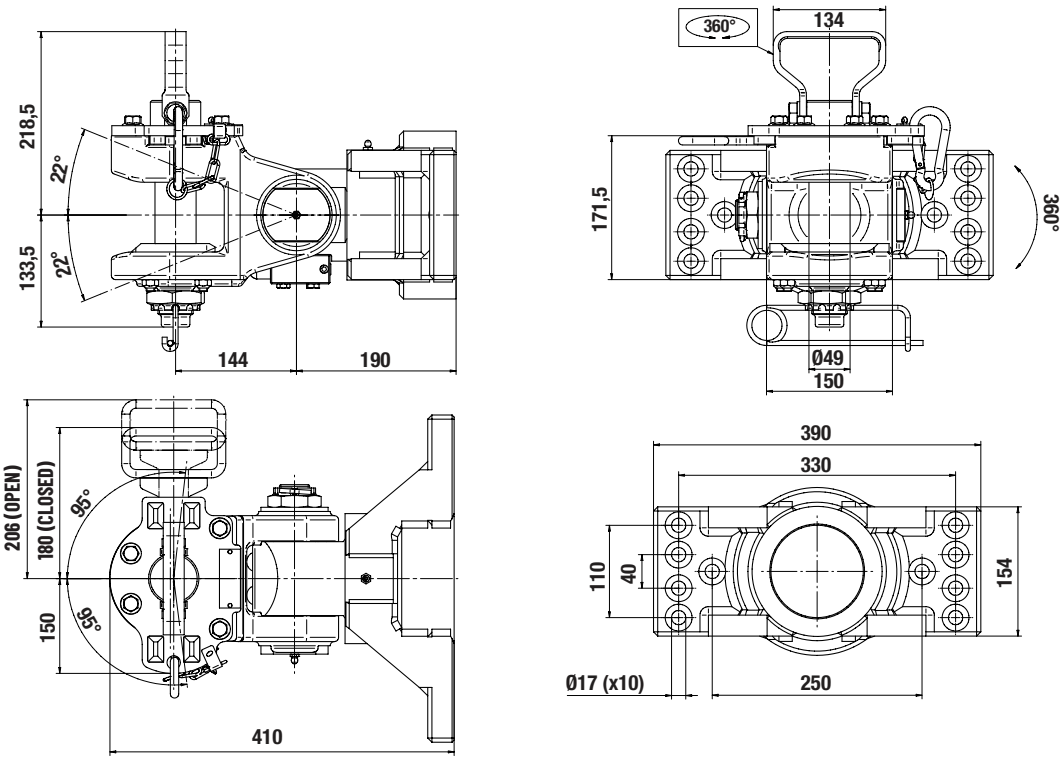

SPARE PARTS

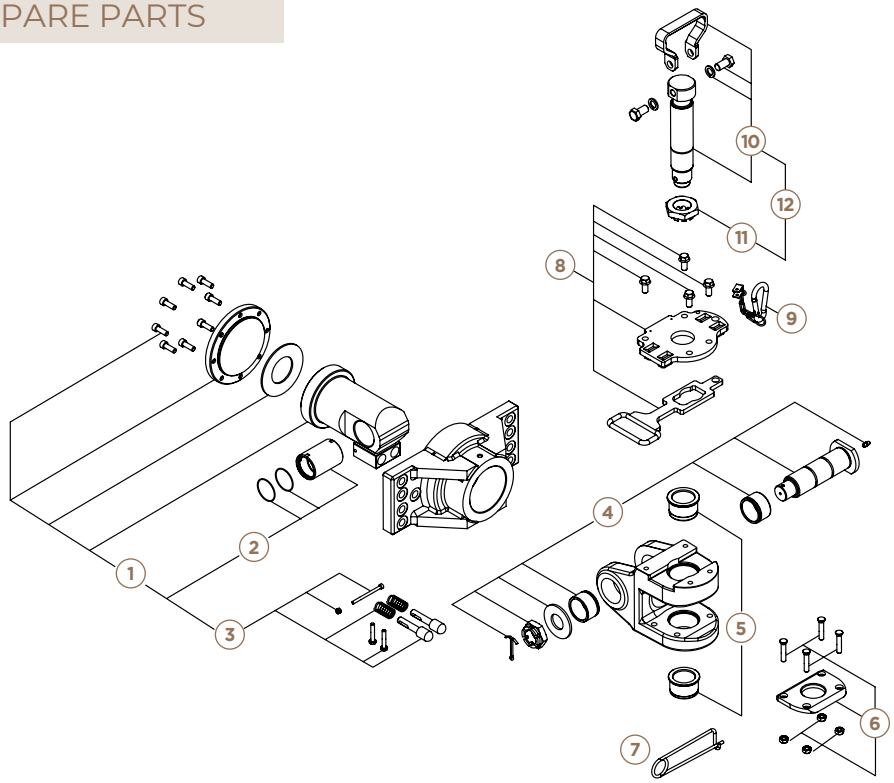

	Part number
1	T152 07 32
2	T152 06 50
3	T152 07 31
4	T152 06 92
5	T152 06 93
6	T152 06 94
7	T152 07 07
8	T152 06 95
9	T152 06 96
10	T152 06 97
11	T152 06 60
12	T152 06 98

INSPECTION
GAUGES

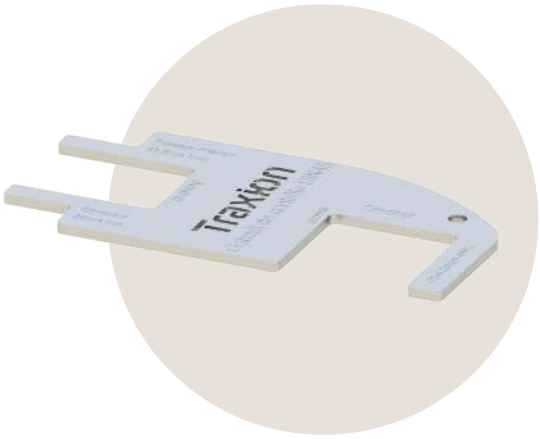

NEW



FOR PINS,
BNA COUPLINGS



FOR DIN50 PINS
AND COUPLINGS



FOR DIN40 PINS
AND COUPLINGS



FOR DRAWBAR EYES
BNA



FOR DRAWBAR EYES
DIN50



FOR DRAWBAR EYES
DIN40

DESCRIPTION

- To ensure the safety and compliance of combinations in service
- For maintenance and before roadworthiness tests
- Simple, reliable and sturdy
- Checks both the drawbar eye and the coupling pin diameter with the same tool
- Stainless steel workshop tool

	Part number
BNA gauge	**T5220168**
DIN50 gauge	**T5220150**
DIN40 gauge	**T5220140**

DIMENSIONS

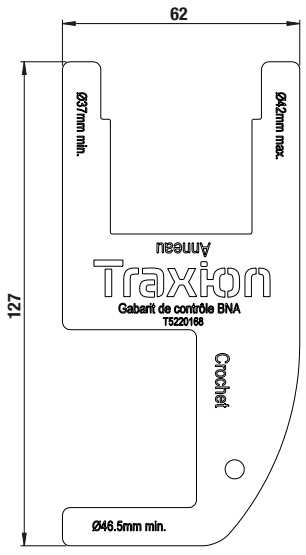

GAUGE
BNA

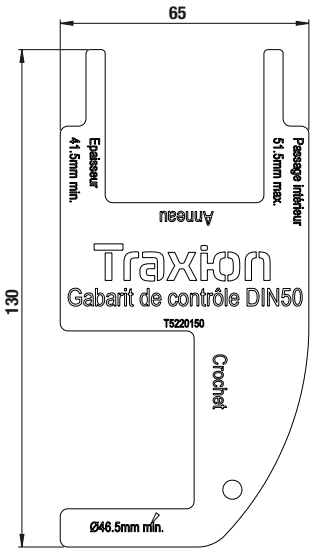

GAUGE
DIN50

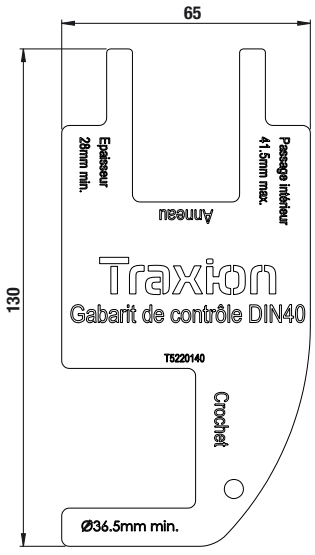

GAUGE
DIN40

02

TOWBEAMS

TOWBEAM TFC-MD (MEDIUM DUTY)	62
TOWBEAM TFC-HD (HEAVY DUTY)	64
ACCESSORIES SPACERS FOR MD / HD TOWBEAMS	66
ACCESSORIES UNIVERSAL SOCKET MOUNT	67
TOWBEAM TFC-UHD (ULTRA HEAVY DUTY)	68
LOWERED TOWBEAM	70
OFFSET TOWBEAM	72
LOW TOWBEAM FOR RIGIDS 12 TO 32 T	74
ACCESSORIES SOCKET MOUNTS	76
ACCESSORIES BOX BRACKETS	76
OEM LCV COUPLING IVECO DAILY 2022	78

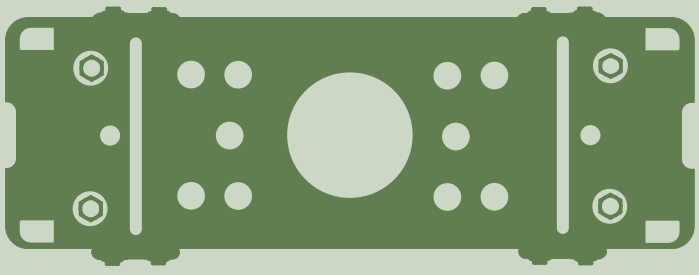

TOWBEAM
TFC-MD
(MEDIUM DUTY)

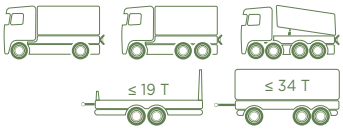

MADE IN Traxion

APPROVED R55

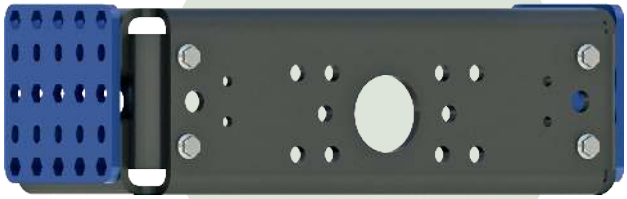

STANDARD SUPPLY:
TOWBEAM + SHIMS

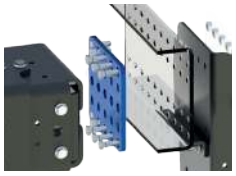

1. SHIMS (IN BLUE): SCREW HEADS RECESSED IN **2 ROWS OF HEXAGONAL HOLES 2. ADVANTAGE:** USE OF THE HOLES OVER THE FULL HEIGHT OF THE CHASSIS FRAME

NEW

DESCRIPTION

- Eco-responsible design, made in France
- For medium-range centre-axle trailers

- Complies with the requirements of Regulation R55
- Compatible with single or reinforced chassis
- Cataphoresis corrosion protection
- GEOMET-treated connecting screws supplied



SPACER OPTION
FOR NON-REINFORCED
CHASSIS



REVERSIBLE SOCKET
MOUNT OPTION
T 5244300

Part number	T5801166	T5801136	T5801176	T5801116	T5801126	T5801146		T5801156
Make	DAF	Daimler Truck	Daimler Truck	IVECO	MAN TRUCK	RENAULT TRUCKS	VOLVO TRUCKS	SCANIA
Model(1)	XD/XG/XF	AROCS	AROCS ACTROS ANTOS	S-WAY X-WAY T-WAY	TGS-TGX	T/K/C	FH/FM/ FMX	XT/V8/S/R
Trailer: drawbar (turntable)								
D (kN)				200				
Trailer: centre-axle								
Dc (kN)				140				
V (kN)				90				
S (kg)				1 000				
Wt.				85 kg				

(1) Other models: please contact us

HGV coupling regulations: check your set-up with the calculator on our website, consult "The technical and regulatory guide - HGV coupling compliance" or contact your area technical sales representative.

MOUNTING DIMENSIONS

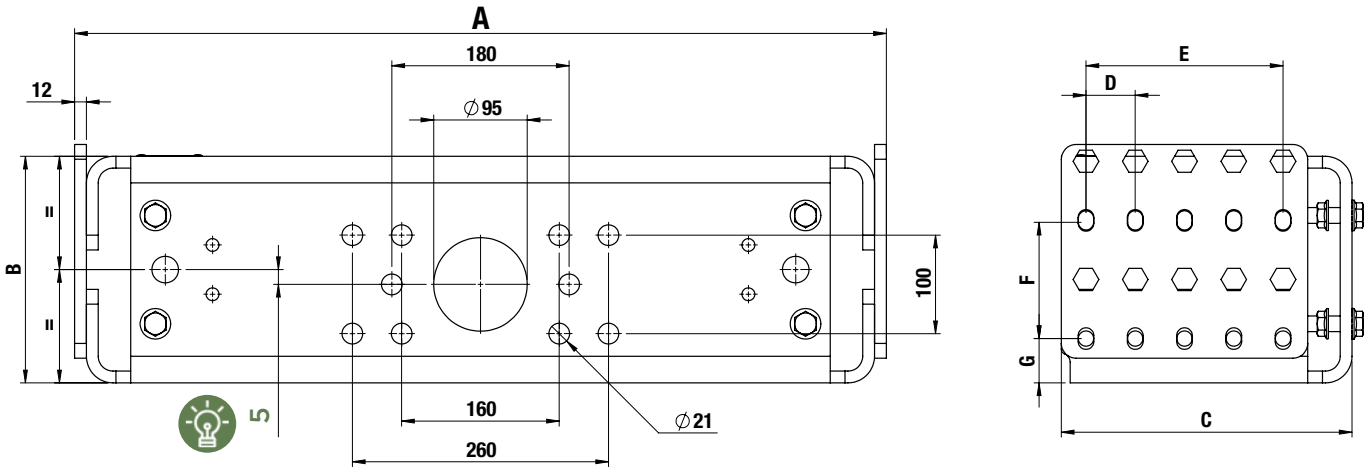

Dimension A is given for reinforced OEM chassis. For non-reinforced chassis, add spacers to your order.

Part number	Make	A	B	C	D	E	F	G	Chassis link
T5801166	DAF	754	230	275	60	180	120	55	M16
T5801136	DAIMLER TRUCK	742		295	50	150	100	56,5	
T5801176	DAIMLER TRUCK	834		245		200			
T5801116	IVECO	756		275	45	180	135	47,5	M14
T5801126	MAN TRUCK	744		295	50	200	100	75	
T5801146	RENAULT TRUCKS VOLVO TRUCKS	824					120	45	
T5801156	SCANIA	734					100		

REGULATIONS

CASES WHERE A HIGH-CAPACITY TFC-MD COUPLING LINE IS MANDATORY



(2) Depending on the platform length and the trailer wheelbase / GWV = maximum technically permissible mass

BODYBUILDERS, DEALERS, RENTAL COMPANIES, USERS: The coupling is a piece of safety equipment. To configure it correctly and ensure regulatory compliance, our technical sales teams will advise you on all rigid / trailer combinations to be equipped.

TOWBEAM
TFC-HD
(HEAVY DUTY)

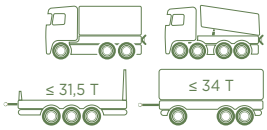

MADE IN Traxion

APPROVED R55

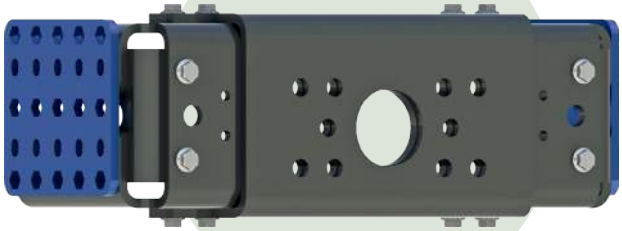

STANDARD SUPPLY:
TOWBEAM + SHIMS



1. SHIMS (IN BLUE): SCREW HEADS RECESSED IN **2 ROWS OF HEXAGONAL HOLES 2. ADVANTAGE:** USE OF THE HOLES OVER THE FULL HEIGHT OF THE CHASSIS FRAME

NEW

DESCRIPTION



SPACER OPTION
FOR NON-REINFORCED
CHASSIS



REVERSIBLE SOCKET
MOUNT OPTION
T 524 43 00

- Eco-responsible design, made in France
- For heavy-range centre-axle trailers
- Complies with the requirements of Regulation R55
- Compatible with single or reinforced chassis
- Cataphoresis corrosion protection
- GEOMET-treated connecting screws supplied

Part number	T580 0166	T580 0136	T580 0176	T580 0116	T580 0126	T580 0146		T580 0156
Make	DAF	Daimler Truck	Daimler Truck	IVECO	MAN TRUCK	RENAULT TRUCKS	VOLVO TRUCKS	SCANIA
Model(1)	XD/XG/XF	AROCS	AROCS ACTROS ANTOS	S-WAY X-WAY T-WAY	TGS-TGX	T/K/C	FH/FM/ FMX	XT/V8/S/R
Trailer: drawbar (turntable)								
D (kN)	200							
Trailer: centre-axle								
Dc (kN)	160							
V (kN)	140							
S (kg)	1 000							
Wt.	100 kg							

(1) Other models: please contact us

HGV coupling regulations: check your set-up with the calculator on our website, consult "The technical and regulatory guide - HGV coupling compliance" or contact your area technical sales representative.

MOUNTING DIMENSIONS

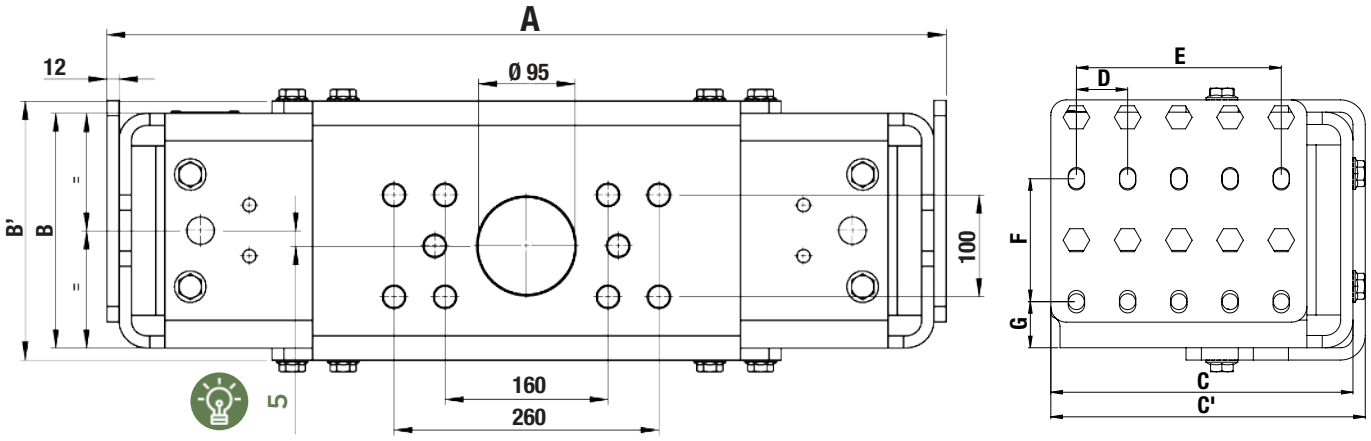

Dimension A is given for reinforced OEM chassis. For non-reinforced chassis, add spacers to your order.

Part number	Make	A	B	B'	C	C'	D	E	F	G	Chassis link
T580 0166	DAF	754	230	254	275	287	60	180	120	55	M16
T580 0136	DAIMLER TRUCK	742			295	307	50	150	100	56,5	
T580 0176	DAIMLER TRUCK	834			245	257		200			
T580 0116	IVECO	756			275	287	45	180	135	47,5	M14
T580 0126	MAN TRUCK	744			295	307	50	200	120	75	
T580 0146	RENAULT TRUCKS VOLVO TRUCKS	824								45	
T580 0156	SCANIA	734							100		

REGULATIONS

CASES WHERE A VERY HIGH-CAPACITY TFC-HD COUPLING LINE IS MANDATORY



(2) Depending on the platform length and the trailer wheelbase / GWV = maximum technically permissible mass

BODYBUILDERS, DEALERS, RENTAL COMPANIES, USERS: The coupling is a piece of safety equipment. To configure it correctly and ensure regulatory compliance, our technical sales teams will advise you on all rigid / trailer combinations to be equipped.

ACCESSORIES

SPACERS FOR MD / HD TOWBEAMS

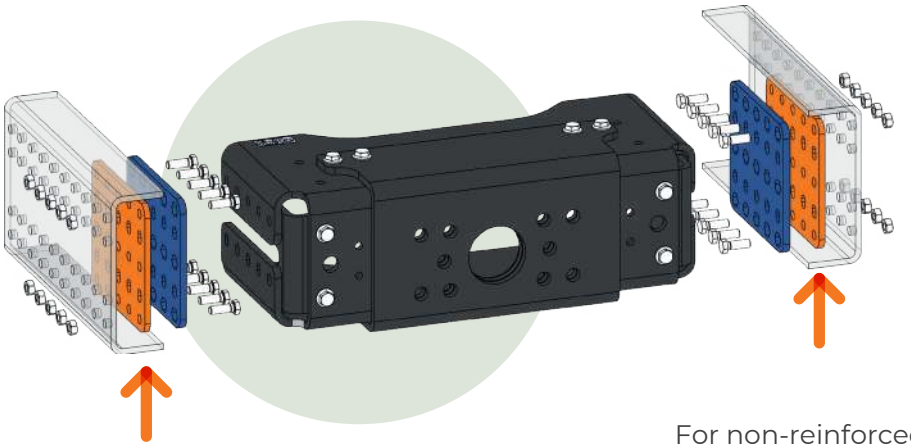

For non-reinforced chassis, add spacers to your order

DESCRIPTION

- **Supplied in pairs**
- For TFC-MD and TFC-HD towbeams fitted on non-reinforced chassis
- Black cataphoresis coating

Thickness	2 x 5 mm	2 x 6 mm	2 x 8 mm
DAF	T580 06 05(1)	T580 06 06(1)	T580 06 08
DAIMLER TRUCK	T580 07 05	T580 07 06	T580 07 08
IVECO	T580 01 05	T580 01 06	T580 01 08
MAN TRUCK & BUS	T580 02 05	T580 02 06	T580 02 08
RENAULT TRUCKS / VOLVO TRUCKS	T580 04 05(1)	T580 04 06	T580 04 08
SCANIA	T580 05 05	T580 05 06	T580 05 08(1)

(1) stock item; for any other thickness, please contact us

MOUNTING DIMENSIONS

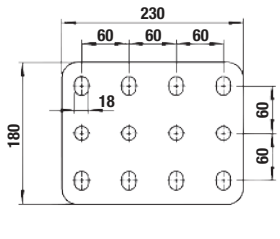

DAF

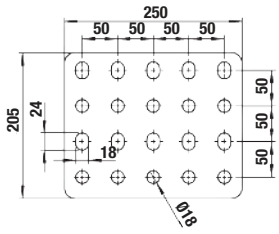

DAIMLER TRUCK

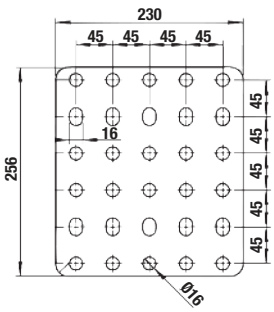

IVECO

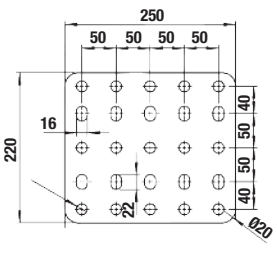

MAN TRUCK & BUS

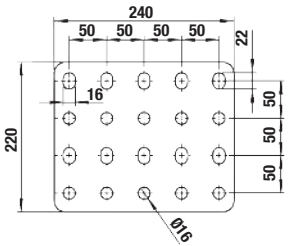

SCANIA

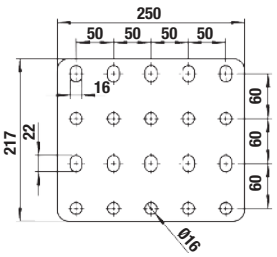

RENAULT TRUCKS / VOLVO TRUCKS

ACCESSORIES
UNIVERSAL SOCKET MOUNT

MADE IN Traxion NEW

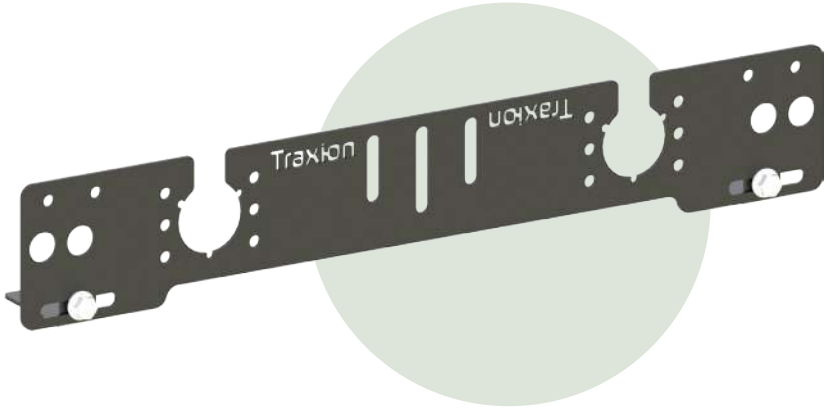

DESCRIPTION

- Reversible fitting, high or low
- Electrical sockets and air couplings
- Compatible with camera bracket T524 48 05
- Black cataphoresis coating, supplied with screws

Options Universal socket mount, brackets included	Part number
	T524 43 00

MOUNTING DIMENSIONS

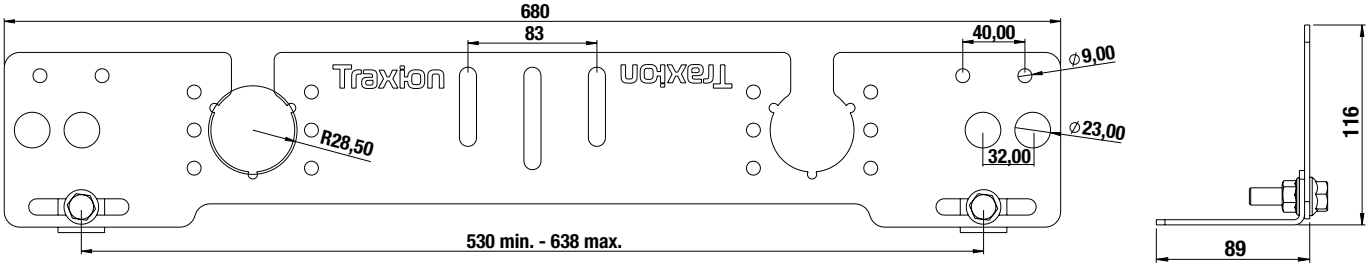



EXAMPLE OF FITTING ON HD
TOWBEAM, WITH BNA COUPLING WITH GUIDE,
CAMERA BRACKET AND CAMERA

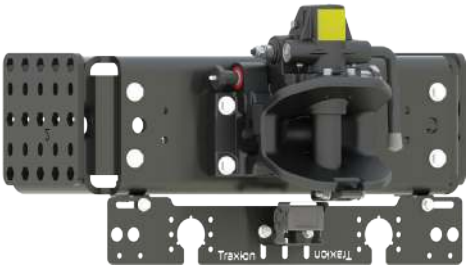

EXAMPLE OF FITTING UNDER MD
TOWBEAM, WITH MANUAL BNA COUPLING,
CAMERA BRACKET AND CAMERA

TOWBEAM
TFC-UHD
(ULTRA HEAVY DUTY) FOR EXCEPTIONAL LOADS UP TO 250 TONNES



MADE IN Traxion

APPROVED R55

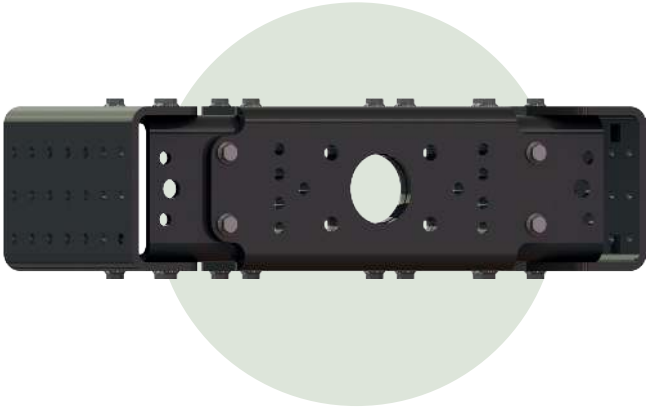



FOR COUPLINGS AND DRAWBAR EYES FOR EXCEPTIONAL LOADS



FOR COUPLINGS AND DIN50 DRAWBAR EYES



FOR COUPLINGS AND SWEDISH STD DRAWBAR EYES







DESCRIPTION

- Eco-responsible design, made in France
- For exceptional loads up to 250 T solo
- Approved for multi-axle road trailers

- Compatible with single or reinforced chassis
- Coupling fixing hole patterns 330 x 110 + 250 and 160 x 100 mm
- Simplified side mounting of air and electrical sockets
- Cataphoresis coating
- GEOMET M14 or M16 connecting screws supplied

Part number	T580 9165	T580 9135	T580 9175	T580 9115	T580 9125	T580 9145	T580 9155
Make	DAF	Daimler Truck	Daimler Truck	IVECO	MAN	RENAULT TRUCKS VOLVO TRUCKS	SCANIA
Trailer: drawbar (turntable)							
D max. (kN)(1)				400			

(1) Depending on the mounting layout, see technical drawings





MOUNTING DIMENSIONS

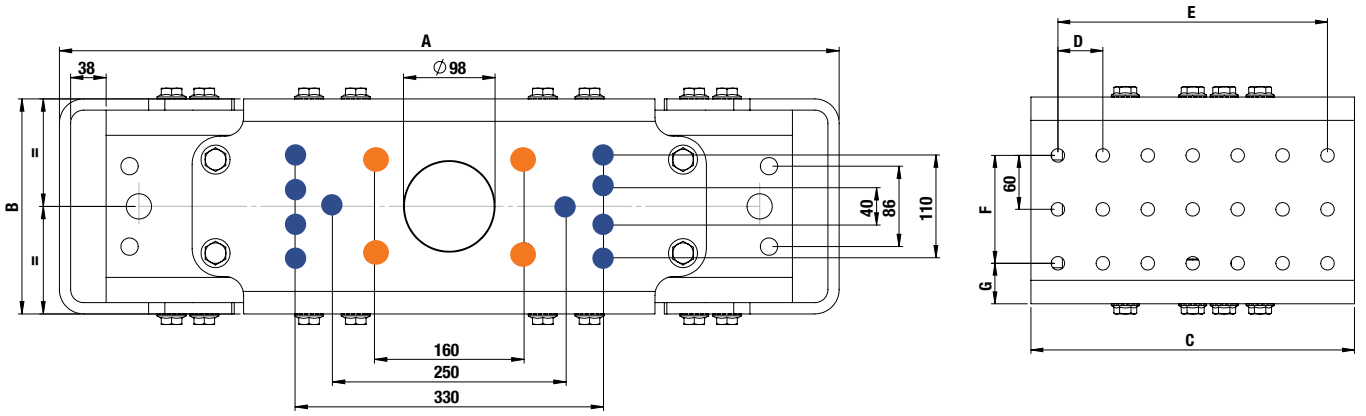

Hole pattern (mm)	D max. (kN)
160 x 100	350
330 x 110 + 250	400

Part number	Make	A	B	C	D	E	F	G	Chassis link
T580 9165	DAF	754	230	360	60	300	120	55	M16
T580 9135	DAIMLER TRUCK	742			50		100	56,5	
T580 9175	DAIMLER TRUCK	834							
T580 9115	IVECO	756			45	315	135	47,5	M14
T580 9125	MAN TRUCK & BUS	744			50	300	140	35	
T580 9145	RENAULT TRUCKS VOLVO TRUCKS	824					120	45	M14
T580 9155	SCANIA	734					100		

REGULATIONS

CASES WHERE AN ULTRA HIGH-CAPACITY TFC-UHD COUPLING LINE IS MANDATORY

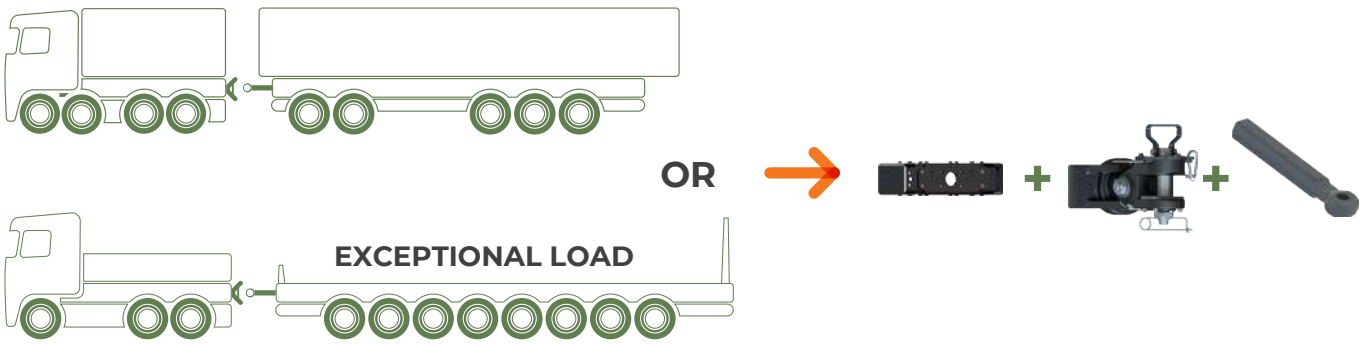

BODYBUILDERS, DEALERS, RENTAL COMPANIES, USERS: The coupling is a piece of safety equipment. To configure it correctly and ensure regulatory compliance, our technical sales teams will advise you on all rigid / trailer combinations to be equipped.

TOWBEAM
LOWERED

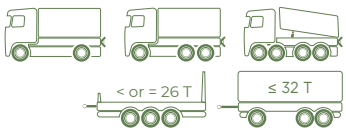

MADE IN Traxion | APPROVED R55 | + LIGHTER - LESS CO_2

ADAPTABLE

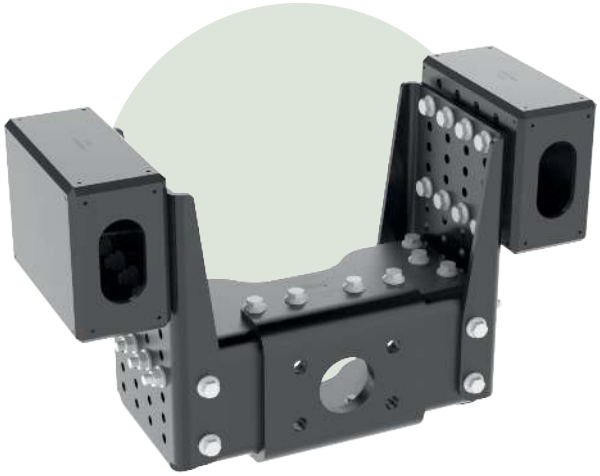

traxion.fr
CUSTOM ORDER FORM



WITH COUPLING BNA



WITH COUPLING DIN 50

NEW

DESCRIPTION

- Eco-responsible design, made in France
- Coupling adjusted to the trailer drawbar eye position with vertical adjustment in 36 mm steps
- 240 or 260 mm high boxes to be inserted into the chassis frames
- Boxes to be drilled to match the OEM chassis hole layout
- Project validation with technical drawings
- Factory pre-assembled bolted towbeam for vehicles ≥ 18 T
- Chassis fitting in M14 or M16
- Factory-fitted BNA or DIN couplings
- Coupling mounting hole pattern 160 x 100 mm
- Standard cataphoresis coating

Root code	T687xxxx
Mounting	M14/M16
D (kN)	145
Dc (kN)	130
V (kN)	75
S (kg)	1 000

GEOMET screw sets		Part number
M14		**T520 54 82**
M16	L50	**T520 54 92**
	L60	**T520 54 94**
	L70	**T520 54 96**

MOUNTING DIMENSIONS

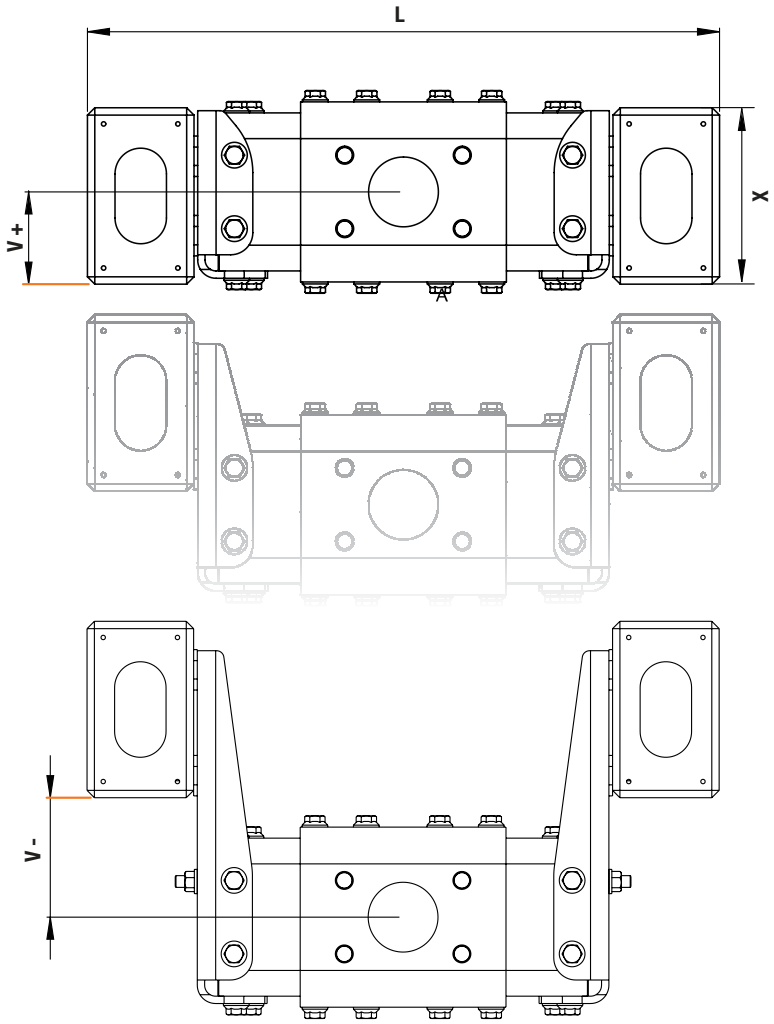

L	V		X
730 mm - 860 mm	+ 162 mm	A	240 mm / 260 mm
	+ 126 mm	B	
	+ 90 mm	C	
	+ 54 mm	D	
	+ 18 mm	E	
	- 18 mm	F	
	- 54 mm	G	
	- 90 mm	H	
	- 126 mm	I	
	- 162 mm	J	

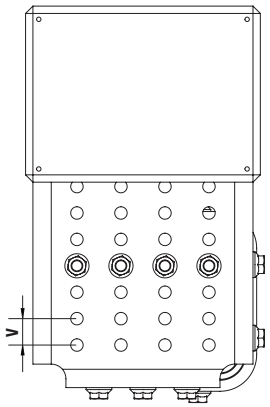

SIDE VIEW

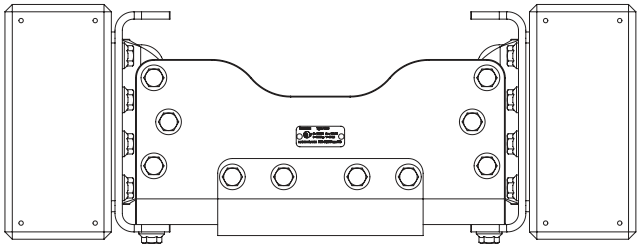

TOP VIEW

TOWBEAM
OFFSET

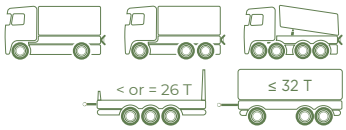

MADE IN Traxion | APPROVED R55 | + LIGHTER - LESS CO_2

ADAPTABLE

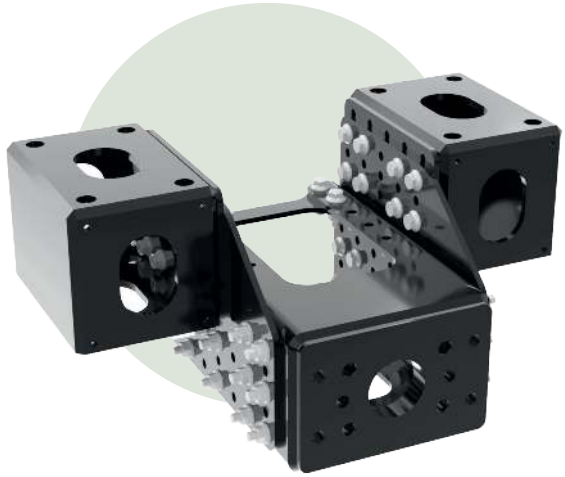

traxion.fr
CUSTOM ORDER FORM



WITH BNA COUPLING WITH GUIDE



WITH COUPLING DIN 50

NEW

DESCRIPTION

- Eco-responsible design, made in France
- **UNIQUE:** Towbeam with horizontal offset of up to 210 mm and vertical lowering adjustable in 35 mm steps
- Improves the turning of combinations on narrow roads (forestry, milk collection, construction site vehicles, etc.)
- Coupling adjusted to the trailer drawbar eye position with vertical adjustment in 35 mm steps
- Factory pre-assembled bolted towbeam for vehicles ≥ 18 T
- Chassis connection via boxes to be drilled
- Chassis fitting in M14 or M16
- Factory-fitted BNA or DIN couplings
- Cataphoresis coating
- GEOMET-quality assembly screws

Root code	T690xxxx
Mounting	M14/M16
D (kN)	200
Dc (kN)	140
V (kN)	90
S (kg)	1 000

GEOMET screw sets		Part number
M14		**T5205482**
M16	L50	**T5205492**
	L60	**T5205494**
	L70	**T5205496**

MOUNTING DIMENSIONS

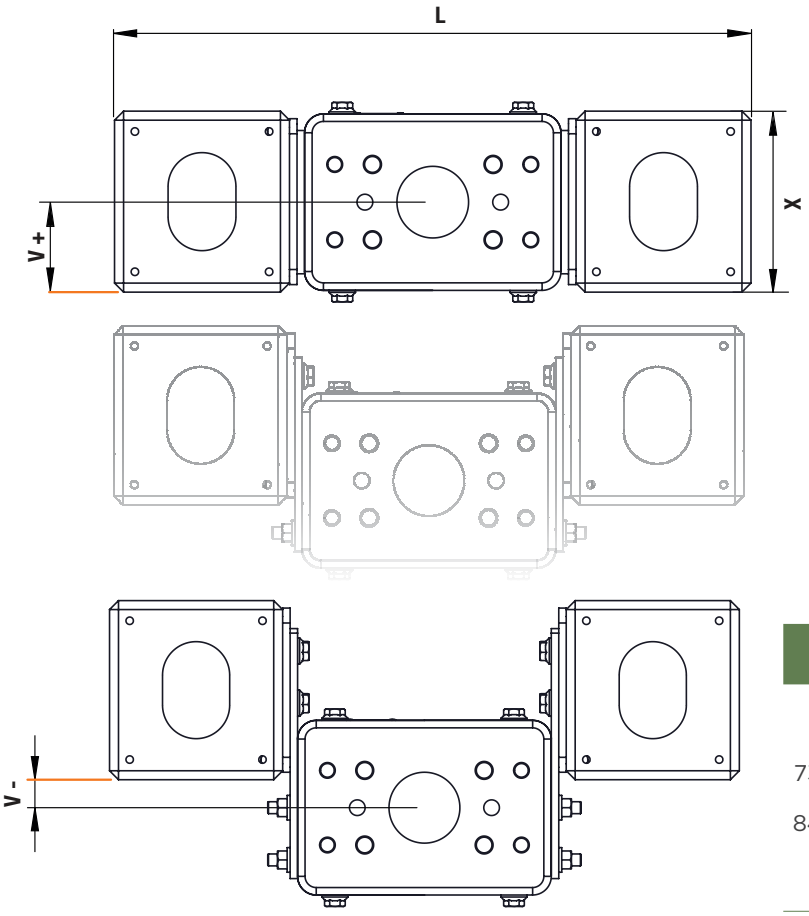

L	V		H		X
734 mm - 844 mm	+ 103 mm	A	30 mm	1	240 mm / 260 mm
	+ 68 mm	B	90 mm	2	
	+ 33 mm	C	150 mm	3	
	- 2 mm	D	210 mm	4	
	- 37 mm	E			

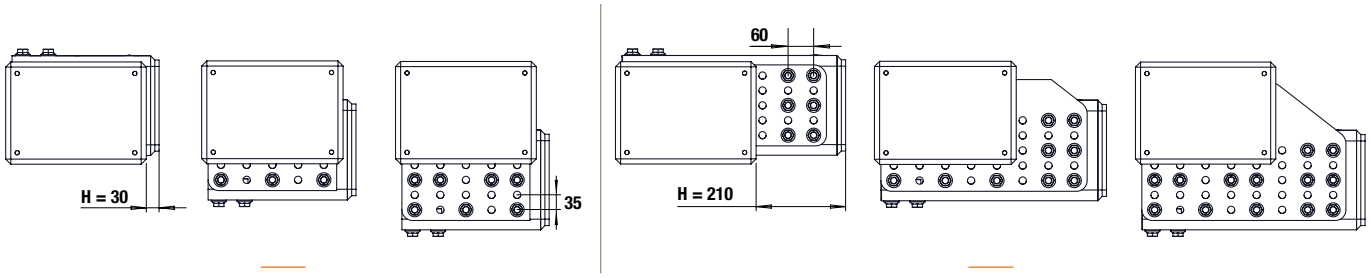

SIDE VIEWS

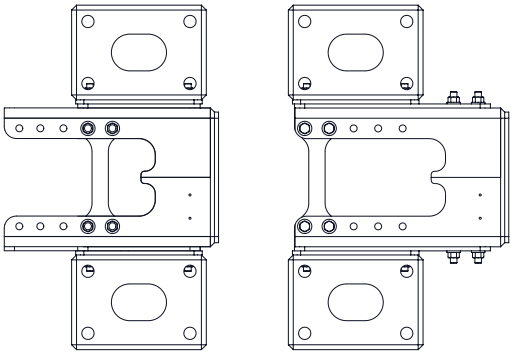

TOP VIEWS

LOW TOWBEAM
RIGIDS 12 TO 32 T

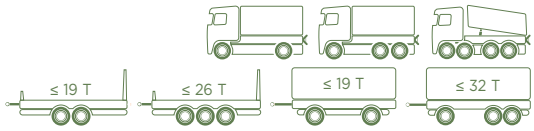

MADE IN Traxion | APPROVED R55 | + LIGHTER - LESS CO_2





WITH BNA COUPLING WITH PNEUMATIC OPENING AND SOCKET MOUNT TELESCOPIC



WITH DIN 50 COUPLING WITH PNEUMATIC OPENING AND SOCKET MOUNT TELESCOPIC

NEW

traxion.fr CUSTOM ORDER FORM

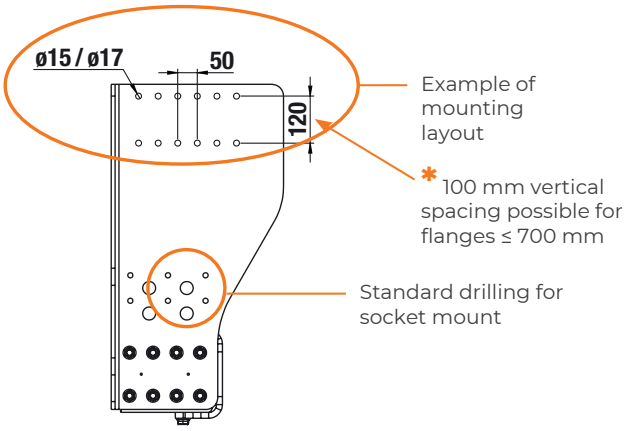

DESCRIPTION

- Eco-responsible design, made in France
- 9 flange combinations to suit all mountings
- Standard flanges without rear bend, ideal for fitting tail lifts
- **Unique:** vertical drilling from 100 mm for flanges up to 700 mm (not compatible with straight and clearance flanges)*
- Chassis fixing in M10, M12, M14 or M16
- Compatible with Traxion couplings with pneumatic opening
- GEOMET-quality assembly screws
- Optional flange fitting
- Special flanges to clear intermediate crossmembers or suspension hangers
- External width up to 870 mm
- Fixed or telescopic galvanised socket mounts (optional)

Root code	T61xxxxx		T62xxxxx		T63xxxxx	
Category	1		2		3	
D (kN)	70		110		200	
Dc (kN)	70		95		130	
S (kg)	700	1000	900	1200	1000	2500
V (kN)	30	25	40	35	75	50,5

GEOMET screw sets		Part number
M14		T5205482
M16	L50	T5205492
	L60	T5205494
	L70	T5205496

MOUNTING DIMENSIONS

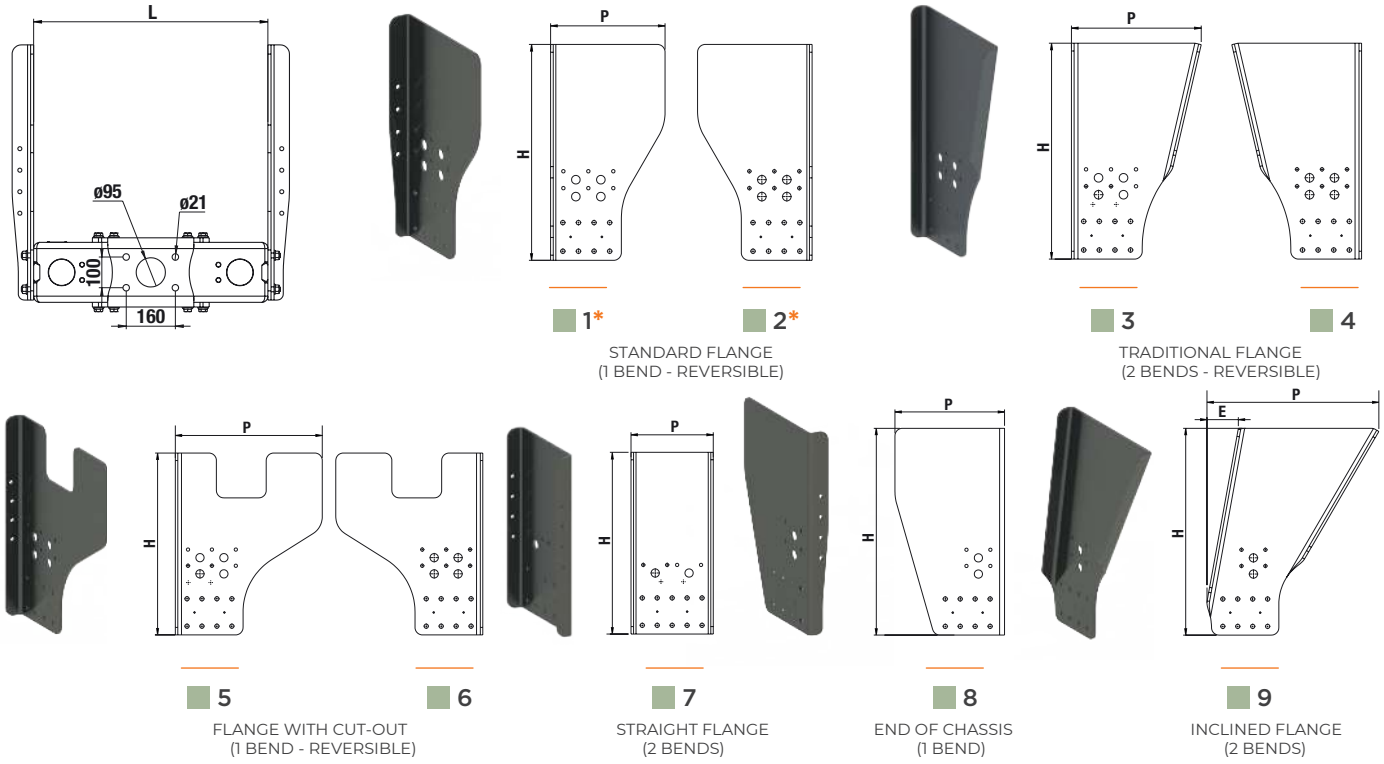

Code	Manufacturer		L (mm)	Ø	Towbeam body (Kg)
10	Man		762	15	59
15	Ford / Iveco / Scania		770		
25	Daf		790	17	59
55	Daimler	Renault / Volvo	850	15	64
57			854		
63	Ford		866		

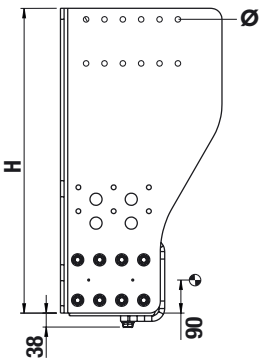

Code	H (mm)	1 and 2		3 and 4		5 and 6		7		8		9		
		P (mm)	Kg	P (mm)	Kg	P (mm)	Kg	P (mm)	Kg	P (mm)	Kg	P (mm)	E (mm)	Kg
36	360										17			
43	430										20			
50	500		22	416	24				32	380	24	693	205	26
56	560	380	25	430	28			330	35		27	692	197	30
62	625		28	445	32		40		40		30	691	186	34
65	650		31	450	33	540	42				34		181	36
69	690	420	34	460	36		44			420	36	690	173	39
73	730		44	476	48	590	50				48	692	158	50
83	830	440	52	490	57					440	56	690	126	59

CREATE YOUR TOWBEAM CODE

T6 + Category + Flange type + Chassis width + Flange height

Coding example:

T6 + 3 + 1 + 55 + 69 **= T6315569**

ACCESSORIES

SOCKET MOUNTS

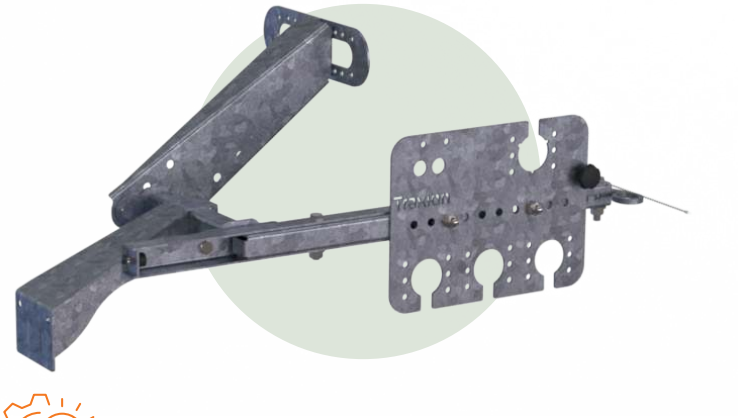



FOR LOW TOWBEAM



WITH PNEUMATIC OPENING BOX

NEW

DESCRIPTION

- Eco-responsible design, made in France
- Complete range, fixed or telescopic
- Optional: remote opening box bracket
- Fully hot-dip galvanised
- To be fixed on Traxion low towbeam flanges

Kits	Part number
Socket plate	**T524 62 10**
Socket plate with fixed bracket	**T524 62 20**
Socket plate with telescopic bracket	**T524 62 50**
Socket plate with fixed bracket + remote opening bracket	**T524 62 20 + T524 62 70**
Socket plate with telescopic bracket + remote opening bracket	**T524 62 50 + T524 62 70**

PNEUMATIC BOX BRACKET





FOR PNEUMATIC OPENING BOX

DESCRIPTION

- Eco-responsible design, made in France
- Fully hot-dip galvanised
- To be fixed under the body

Kits	Part number
Coupling pneumatic box bracket	**T522 40 50**

MOUNTING DIMENSIONS

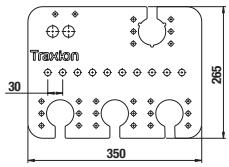

T524 62 10

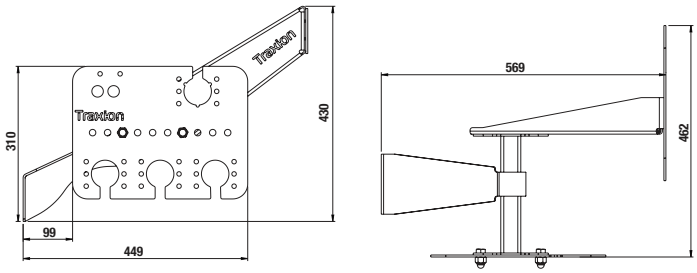

T524 62 20 + T524 62 70

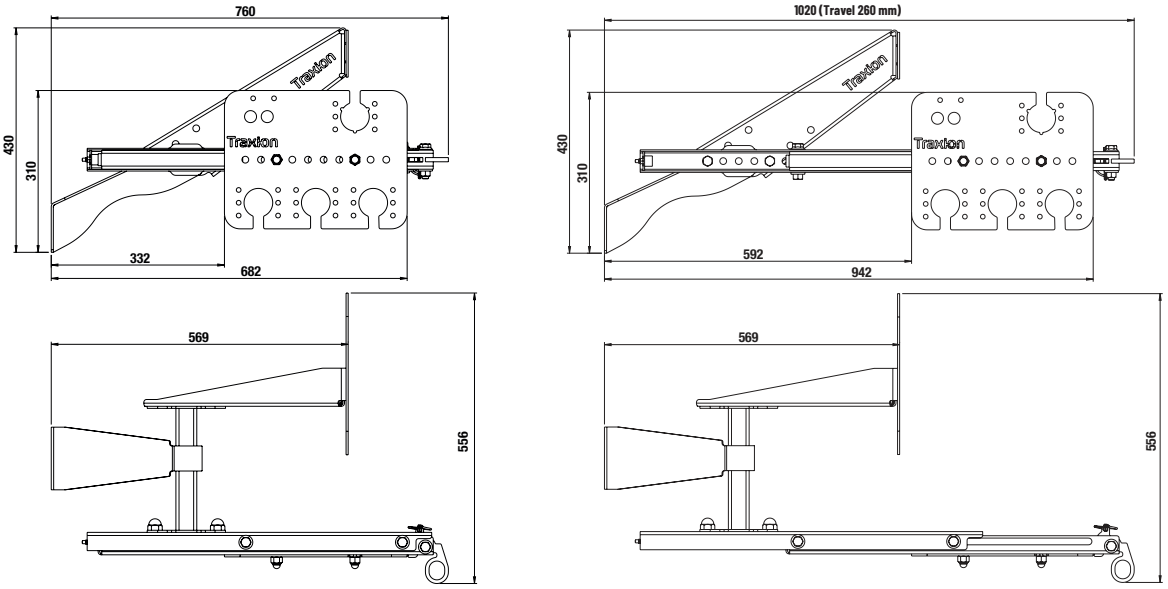

CLOSED OPEN

T524 62 50 + T524 62 70

MOUNTING DIMENSIONS

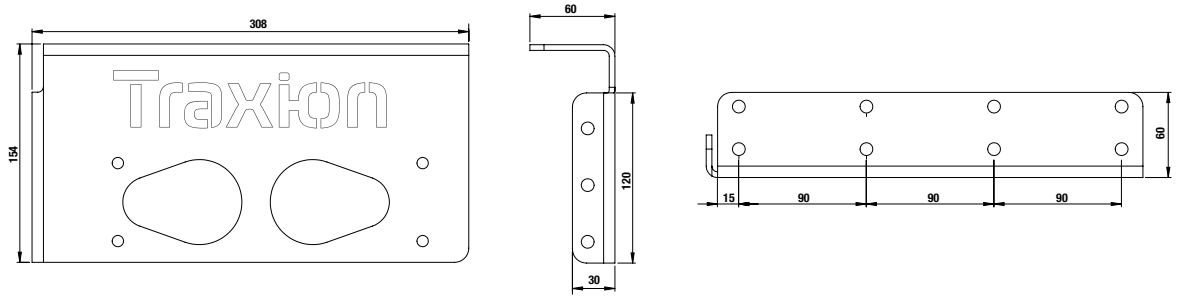

FRONT VIEW SIDE VIEW TOP VIEW

LCV COUPLING
OEM IVECO DAILY 2022
FOR 3.5-TONNE TRAILER



APPROVED R55

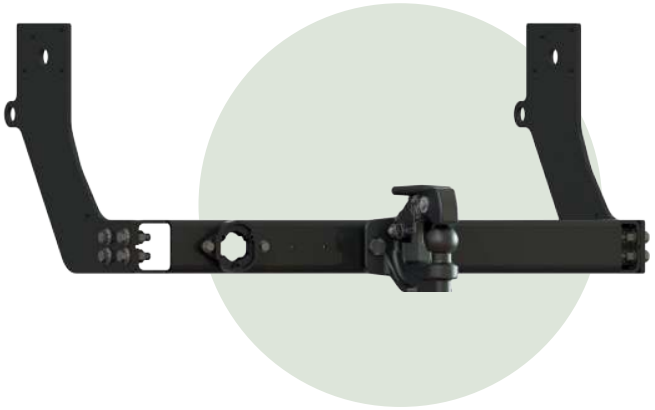

IVECO DAILY



SUPPLIED WITH MIXED HOOK

DESCRIPTION

- For all models in the Daily chassis-cab or van range, single / twin wheels
- Kits supplied complete with mixed hook + screw set for chassis connection
- For models with or without steps

Part number	VAN	
	Model	Wheels
T5804201	30 S - 35 S / wb. 3000-3520	SINGLE
T5804202	30 S - 35 S / wb. 4100	
T5804203	30 S - 35 S / wb. 3000 - 3520	
T5804204	30 S - 35 S / wb. 3520 - 3520 L	
	30 S - 35 S	
T5804205	35 C / wb. 3520	TWIN
T5804206	35 C / wb. 3520 L	
T5804207	35 C / wb. 4100	
T5804203	40 C - 50 C / wb. 3520	
T5804208	40 C - 50 C / wb. 3520 L	
T5804209	40 C - 50 C / wb. 4100 - 4100 L	
T5804210	60 C - 70 C	

Part number	CHASSIS CAB	
	Model	Wheels
T5804214	30 S - 35 S	SINGLE
T5804211	30 S - 35 S / wb. 3000	
T5804215	35 C - 40 C OPT06094(2)	TWIN
T5804216	35 C QUADLEAF / QUADTOR	
	40 C QUADLEAF	
T5804217	40 C QUADTOR	
T5804212	45 C - 50 C	
T5804218	60 C - 70 C	

(2) Semi-elliptic leaf spring suspension

TIE RODS

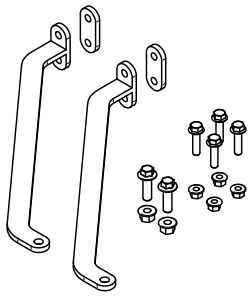

LONG VERSION + SPACER
T5808511

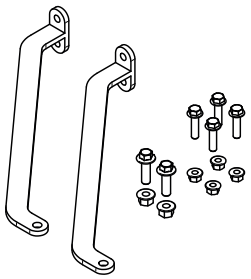

LONG VERSION
T5808512

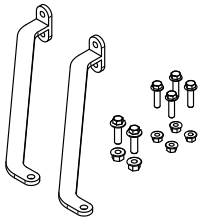

SHORT VERSION
T5808513

Part number	VAN			Wheels
	T5808511	T5808512	T5808513	
T5804201		T5804206	T5804201	SINGLE
T5804202		T5804207	T5804203	
T5804203		T5804202		
T5804205	T5804208		T5804205	TWIN
T5804206	T5804209		T5804203	
T5804207	T5804204			
T5804203	T5804210			

SPARE PARTS

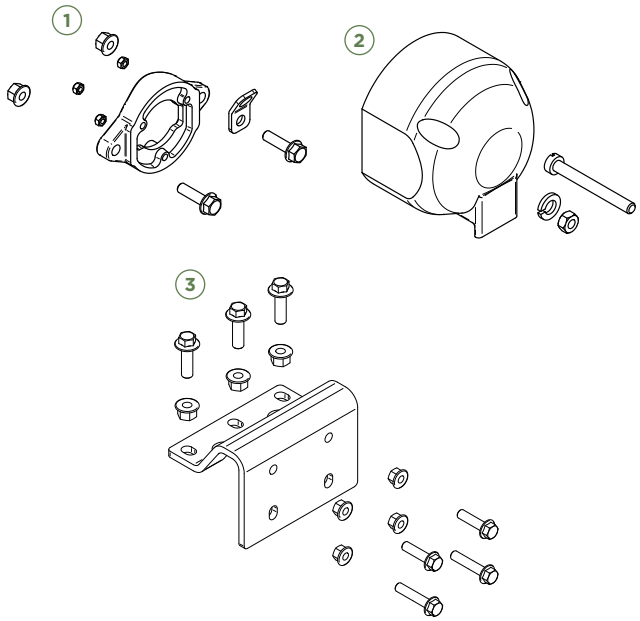

	AFTER-SALES	Model	Part number
1	Electrical socket mount kit	All	T5808501
2	12 V socket kit		T5808502
3	4-hole fixing plate kit Since 2014		T5808503

03

LIGHT & MEDIUM TOWBEAMS

RANGE OVERVIEW	82
BUILD YOUR KIT	84
MOUNTING DIMENSIONS	87
ACCESSORIES	92

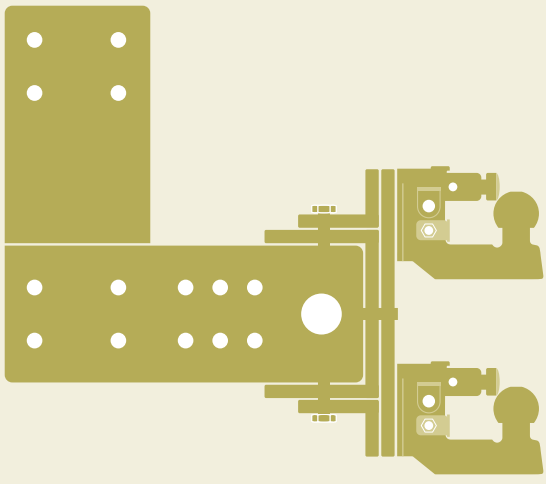

RANGE OVERVIEW

LCV ≤ 3.5 T TOWBEAM + COMFORT MIXED HOOK

≤ 3,5 T ≤ 3,5 T

MADE IN Traxion APPROVED R55.02

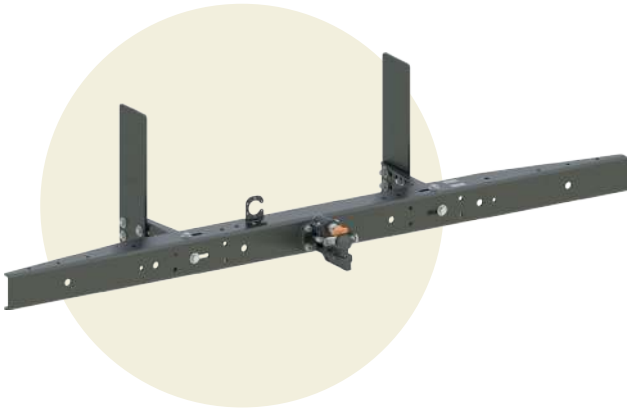

- R55.02 towbeam, all makes, towing up to 3.5 T
- Supplied with Comfort mixed hook - assisted closing and shock absorber
- Compatible with single / twin wheel vehicles
- Option: arms for rear offset
- Bolt-on kits – socket mount included - cataphoresis coating
- Pre-drilled profile for light mounting supports and parking sensors

LCV ≤ 3.5 T MULTI-HEIGHT TOWBEAM + COMFORT MIXED HOOK

≤ 3,5 T ≤ 3,5 T

MADE IN Traxion APPROVED R55.02

- R55.02 towbeam, all makes, towing up to 3.5 T
- The ideal combination for versatile vehicles towing every trailer in the fleet

→ Multi-height plate option to offset the coupling up or down by **56 or 112 mm**

or

→ Corner plate to offset the coupling up or down by **28 mm**

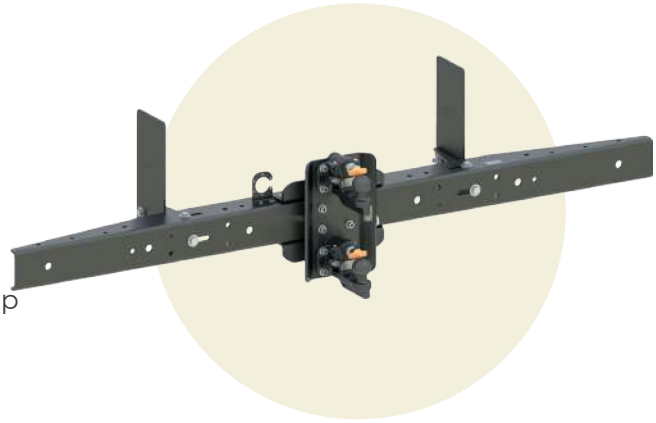

MULTI-HEIGHT PLATE OPTION



COUPLING OFFSET BRACKET OPTION

LCV ≤ 5.5 T TOWBEAM / URP + COMFORT MIXED HOOK

≤ 5,5 T ≤ 3,5 T

MADE IN Traxion

APPROVED
R58.03
R55.02
E2 2015/208



COUPLING OFFSET BRACKET OPTION

- R55.02 towbeam and R58.03 URP, all makes, towing up to 3.5 T
- Supplied with Comfort mixed hook - assisted closing and shock absorber
- Compatible with single / twin wheel vehicles
- Option: arms for rear offset
- Bolt-on kits – socket mount included - cataphoresis coating
- Pre-drilled profile for light mounting supports and parking sensors

→ Corner plate option to offset the coupling up or down by **28 mm**

Non-towing URP version available

03

LCV ≤ 8 T TOWBEAM / URP + COMFORT MIXED HOOK

≤ 8 T ≤ 3,5 T

MADE IN Traxion

APPROVED
R58.03
R55.02
E2 2015/208

- R55.02 towbeam and R58.03 URP, all makes, towing up to 3.5 T
- Supplied with Comfort mixed hook - assisted closing and shock absorber
- Compatible with single / twin wheel vehicles
- Option: arms for rear offset
- Bolt-on kits – socket mount included - cataphoresis coating
- Pre-drilled profile for light mounting supports and parking sensors

Non-towing URP version available

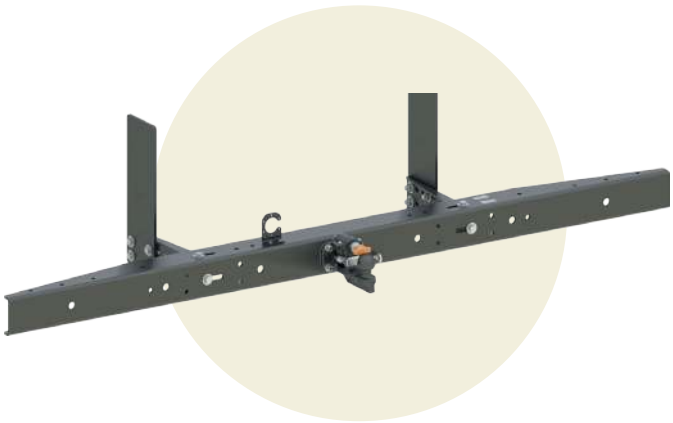

BUILD YOUR KIT

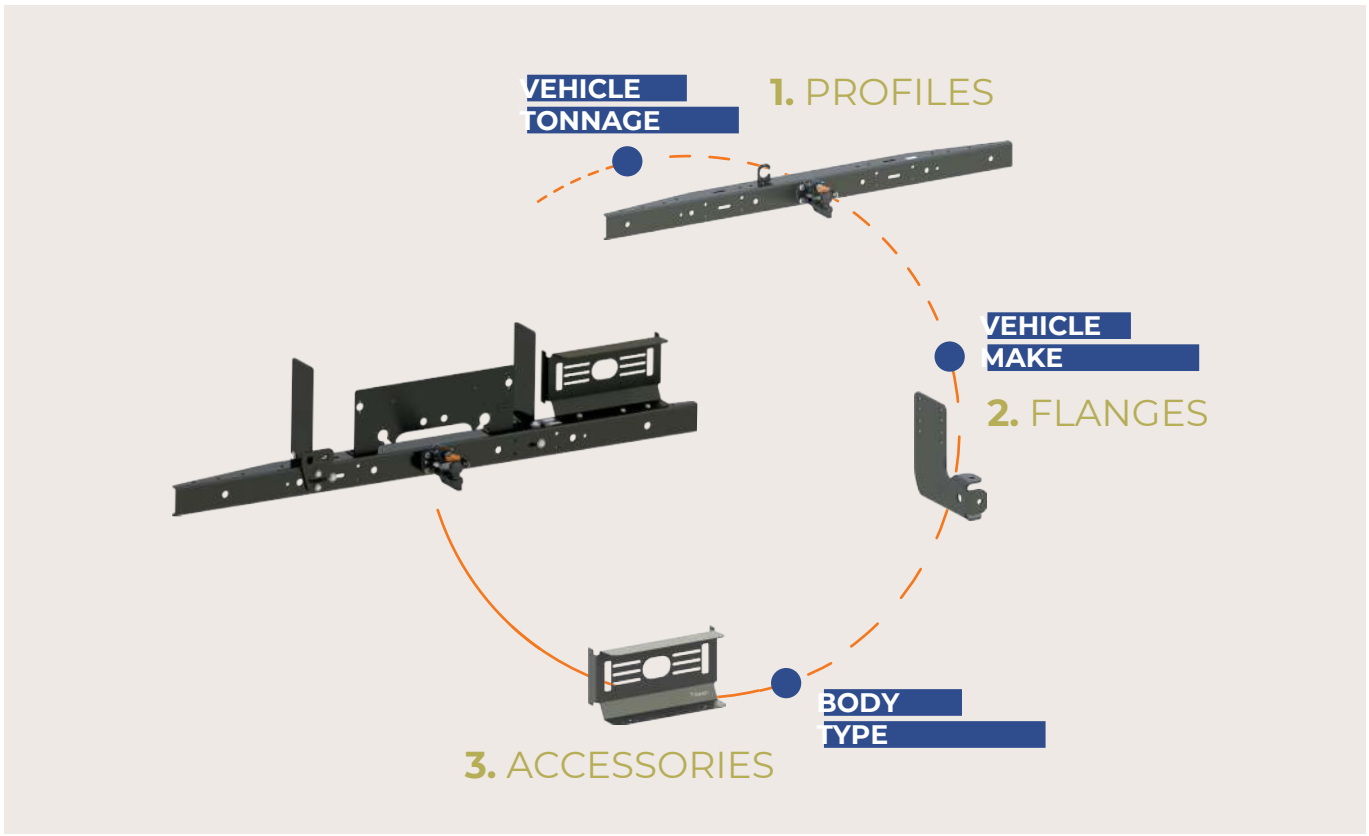

1. PROFILES

1.1 TOWING - SUPPLIED WITH COMFORT MIXED HOOK

	Mounting type						Approvals		Length (mm)
	Single height	Kg	Offset	Kg	Multi-height	Kg			
≤ 3,5T	T783 00 00	22,6	T783 35 00 + T785 01 00	28,9	T783 35 00 + T783 01 05	36,2	R55.02		1900
≤ 5,5T	T785 35 00	26,4	T785 35 00 + T785 01 00	28,9				R58.03	
≤ 8T	T788 35 00	29,9							2100

Part number	T783 00 00	T783 35 00	T785 35 00	T788 35 00
D / DC (kN)	17,2	17,2	21	24
S (kg)	210	210	210	210

1.2 NON-TOWING - URP ONLY

	Profile	Kg	Approval
≤ 5,5T	T785 00 00	21,9	R58.03
≤ 8T	T788 00 00	24,6	



2. FLANGES

2.1 OEM - SUPPLIED WITH MOUNTING SCREWS

					Flange type					
	Make	Model	Type		One-piece	Kg	Short arms	Kg	Long arms	Kg
≤ 3,5T to 5,5T	IVECO	DAILY / eDAILY	35S - 50C / e35S - e45C		T785 00 30	5,6				
			35C - 50C / e42C - e45C				T788 00 30	11,1	T788 00 35	12,2
	RENAULT	MASTER IV / MASTER IV E-TECH	TRS / TRSe	CC	T785 00 90	8	T785 00 92	8	T785 00 93	9
			PRJ	CC			T785 00 94	8	T785 00 95	9
			TRS / TRSe	PC			T785 00 96	9	T785 00 97	10
		MASTER III	PRJ	SHORT OVERHANG	T785 00 32	7				
			PRJ	LONG OVERHANG	T785 00 34	9,1				
	MITSUBISHI	CANTER / eCANTER	3S - 3C / 4Se - 4Ce		T785 00 40	5,6				
	MERCEDES -BENZ	SRINTER / eSPRINTER	300		T785 00 42	6,1				
			400 + 500		T785 00 60	5,8				
	ISUZU	M	21 / 27				T785 00 50	10	T785 00 55	11,2
	MAN / VW	TGE / CRAFTER			T785 00 62	8,6				
	FORD	TRANSIT / eTRANSIT	350 / 390 / 425 / 430 / 470 / 500		T785 00 70	5,9				
	STELLANTIS	BOXER / JUMPER / MOVANO / DUCATO e-BOXER / ë-JUMPER / MOVANO e / E-DUCATO					T785 00 80	6,2		
	MAXUS	DELIVER 9 / eDELIVER 9					T785 02 00	12	T785 02 05	13
> 5,5T to 8T	IVECO	DAILY / eDAILY	65C - 70C / e65C - e70C				T788 00 30	11,1	T788 00 35	12,2
	MITSUBISHI FUSO	CANTER / eCANTER	6S - 7C / 6Se - 7Ce				T788 00 40	12,3	T788 00 45	13,5
	ISUZU	M	29 / 30				T788 00 50	9,8	T788 00 55	10,9

2.2 UNIVERSAL - OPTIONAL MOUNTING SCREWS

	Flange type						Screw set M10	Screw set M12
	One-piece	Kg	Short arms	Kg	Long arms	Kg		
≤ 3,5T	T783 00 20	6,9	T783 00 10	8,3	T783 00 15	9,5	T520 50 10	T520 50 30
≤ 8T	T788 00 20	10,4	T788 00 10	11,2	T788 00 15	12,3		

3. ACCESSORIES

Description	Wt. (kg)	Part number
Single folding step	5	**T524 10 00**
Universal light mounting supports LH / RH(1)	3	**T524 44 00**
Universal caged light mounting supports LH / RH(1)	3	**T524 44 10**
Multi-height licence plate holder	3,5	**T524 45 00**
Extra-wide licence plate holder(1)(2)	5	**T524 45 20**
Lashing ring	0,5	**T524 47 00**
Camera bracket(3)	0,2	**T524 48 00**
Universal camera bracket	0,2	**T524 48 05**

(1) Not compatible with RENAULT Master XDD / STELLANTIS (2) Only compatible with single-height mounting (3) Only compatible with TRAXION mixed hook











MOUNTING DIMENSIONS

PROFILE Traxion UNIVERSAL

1. PROFILES

1.1 TMT

T783 00 00
SINGLE-HEIGHT TOWING PROFILE LCV ≤ 3.5 T

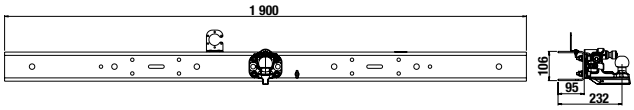

T783 35 00
MULTI-HEIGHT TOWING PROFILE LCV ≤ 3.5 T

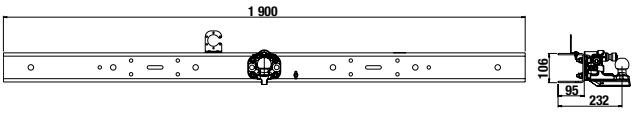

T785 35 00
OFFSET TOWING PROFILE + URP LCV ≤ 5.5 T

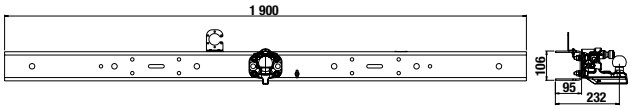

T788 35 00
TOWING PROFILE + URP LCV ≤ 8 T

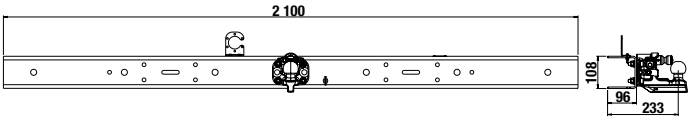

1.2 URP

T785 00 00
NON-TOWING URP PROFILE LCV ≤ 5.5 T

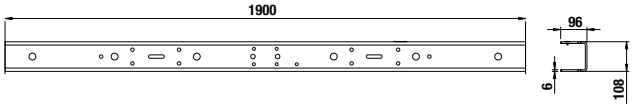

T788 00 00
NON-TOWING URP PROFILE LCV ≤ 8 T

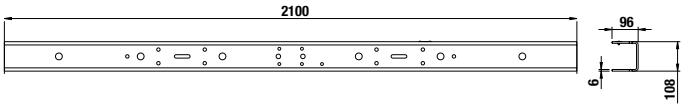

03

2. UNIVERSAL FLANGES

UNIVERSAL FLANGE KITS ONLY FOR C-SHAPED CHASSIS

T783 00 10
UNIVERSAL FLANGE KIT, SHORT ARMS

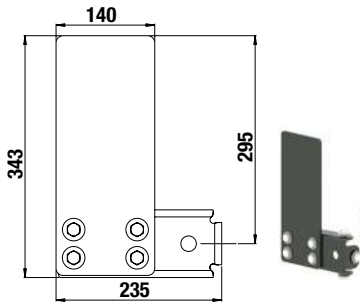

T783 00 15
UNIVERSAL FLANGE KIT, LONG ARMS

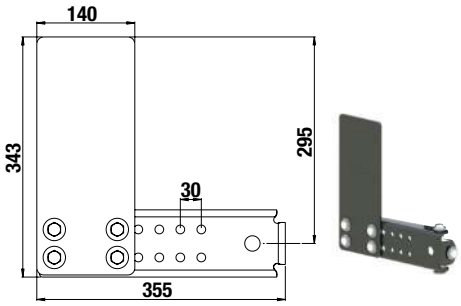

T783 00 20
UNIVERSAL L-SHAPED FLANGE KIT

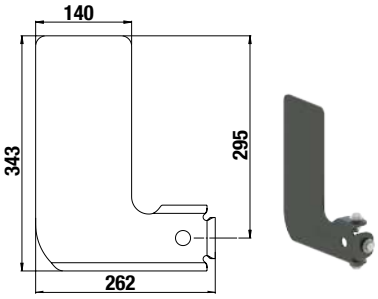

T788 00 10
UNIVERSAL FLANGE KIT, SHORT ARMS

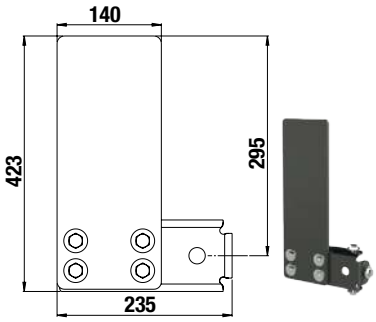

T788 00 15
UNIVERSAL FLANGE KIT, LONG ARMS

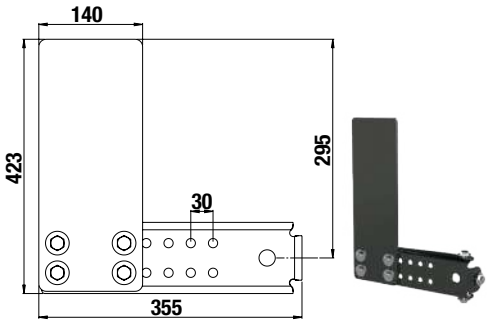

T788 00 20
UNIVERSAL L-SHAPED FLANGE KIT

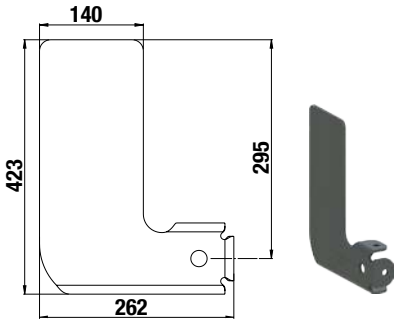

Screw set M10	4	**T520 50 10**
Screw set M12	4,8	**T520 50 30**

3. OEM FLANGES

OEM FLANGES ARE SUPPLIED WITH THEIR REINFORCEMENTS AND SCREWS.

T785 00 42
DAIMLER TRUCK 200 + 300 FLANGE KIT

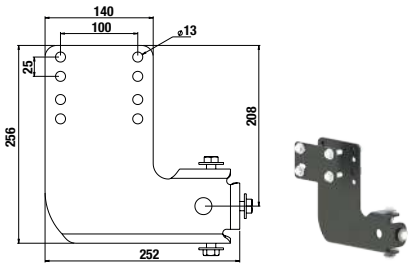

T785 00 60
DAIMLER TRUCK 400 + 500 FLANGE KIT

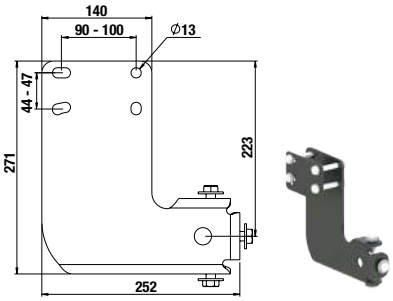

T785 00 70
FORD TRANSIT FLANGE KIT

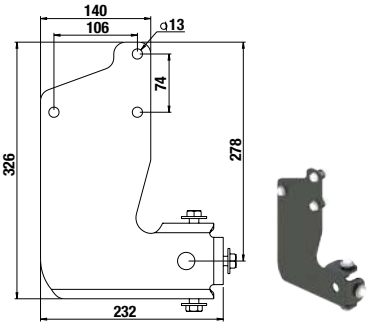

T785 00 40
MITSUBISHI FUSO FLANGE KIT

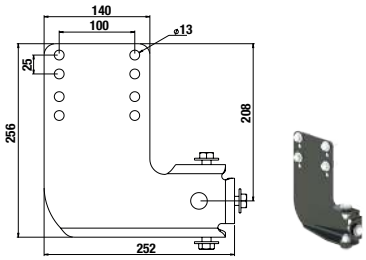

T788 00 40
FUSO 6S-6C-7C FLANGE KIT, SHORT ARMS

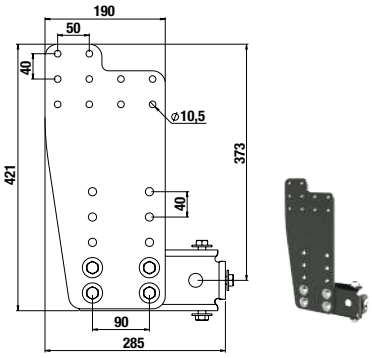

T788 00 45
FUSO 6S-6C-7C FLANGE KIT, LONG ARMS

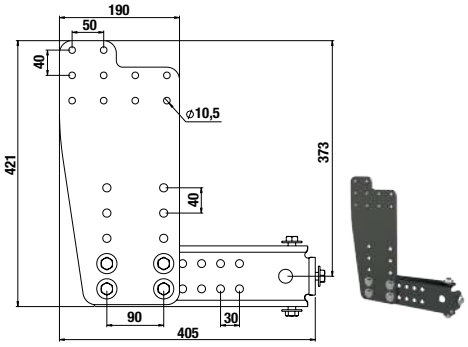

T785 00 50
ISUZU NLR87 TWIN WHEEL FLANGE KIT, SHORT ARMS

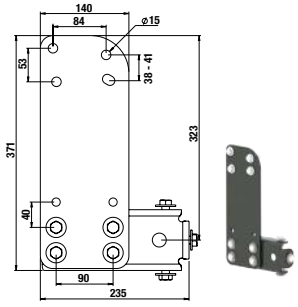

T785 00 55
ISUZU NLR87 TWIN WHEEL FLANGE KIT, LONG ARMS

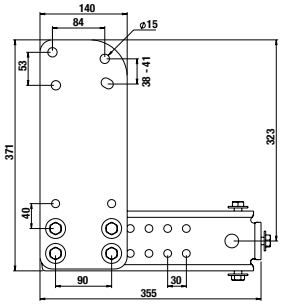

T788 00 50
ISUZU NLR87 TWIN WHEEL FLANGE KIT, SHORT ARMS

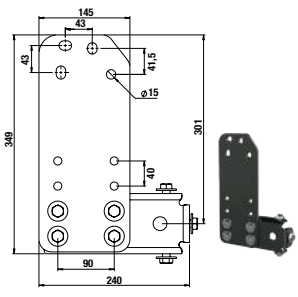

T788 00 55
ISUZU NLR87 TWIN WHEEL FLANGE KIT, LONG ARMS

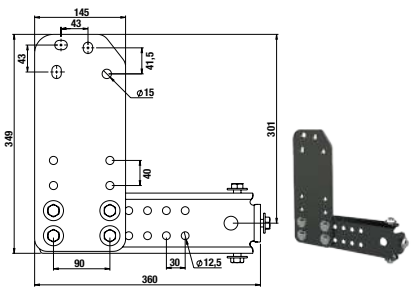

3. OEM FLANGES (CONTINUED)

T785 00 30 IVECO
IVECO DAILY 33S TO 55C
FLANGE KIT

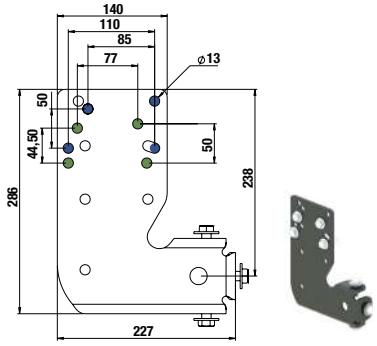

T788 00 30 IVECO
IVECO DAILY 35C TO 70C
FLANGE KIT, SHORT ARMS

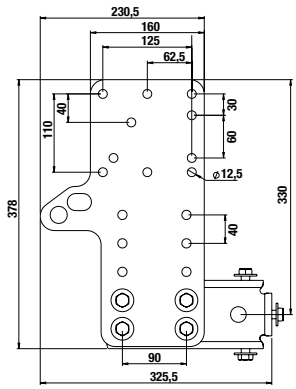

T788 00 35 IVECO
IVECO DAILY 35C TO 70C
FLANGE KIT, LONG ARMS

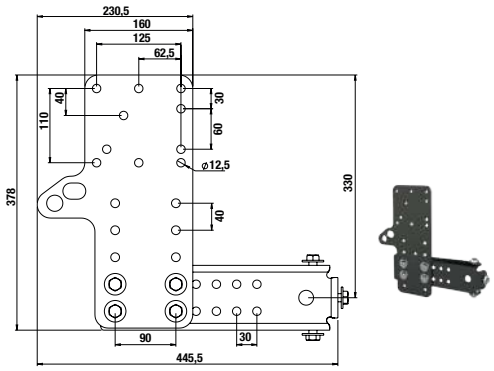

T785 00 62
MAN TGE / VOLKSWAGEN
CRAFTER

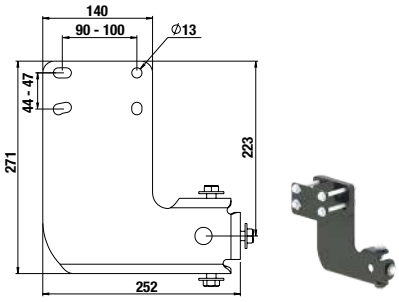

T785 02 00
MAXUS FLANGE KIT, SHORT ARMS

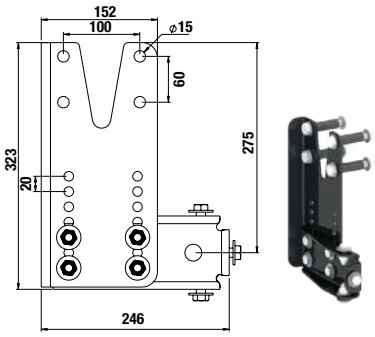

T785 02 05
MAXUS FLANGE KIT, LONG ARMS

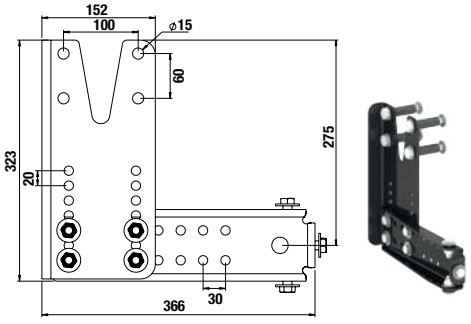

T785 00 80
STELLANTIS FLANGE KIT

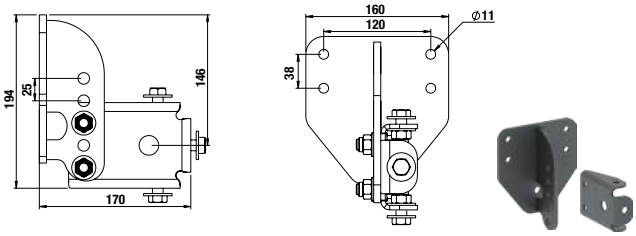

3. OEM FLANGES (CONTINUED)

T785 00 32
RENAULT MASTER III SHORT OVERHANG FLANGE KIT

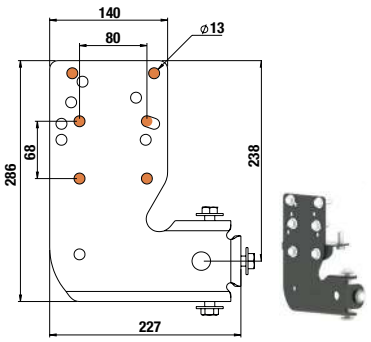

T785 00 34
RENAULT MASTER III LONG OVERHANG FLANGE KIT

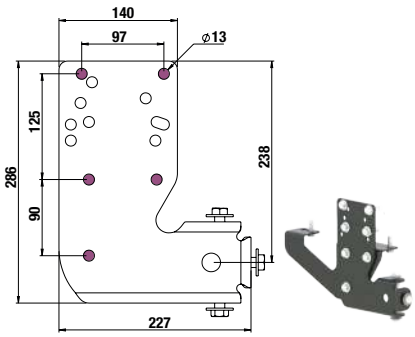

T785 00 90
RENAULT XDD CHASSIS CAB FLANGE KIT, FRONT-WHEEL DRIVE, SINGLE WHEELS

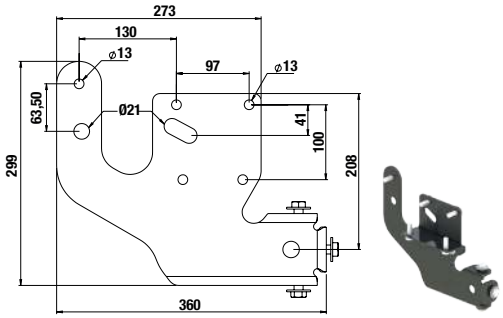

T785 00 92
RENAULT XDD CHASSIS CAB FLANGE KIT, SHORT ARMS, FRONT-WHEEL DRIVE, SINGLE WHEELS

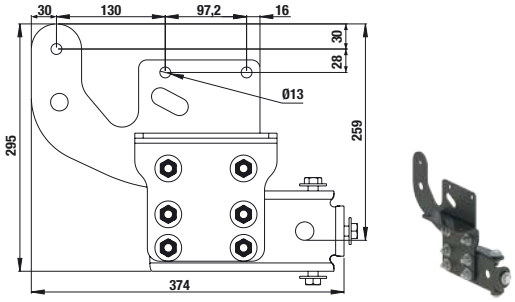

T785 00 93
RENAULT XDD CHASSIS CAB FLANGE KIT, LONG ARMS, FRONT-WHEEL DRIVE, SINGLE WHEELS

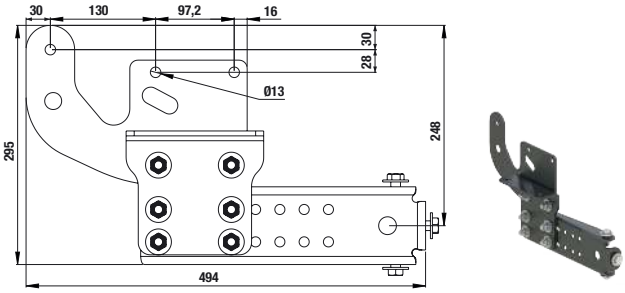

T785 00 94
RENAULT XDD CHASSIS CAB FLANGE KIT, SHORT ARMS, REAR-WHEEL DRIVE, TWIN WHEELS

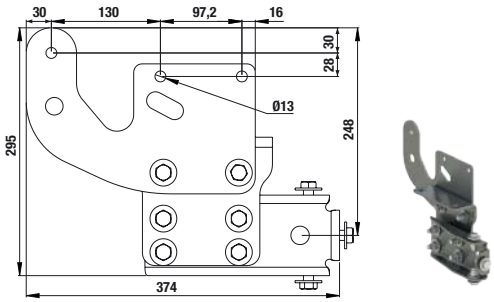

T785 00 95
RENAULT XDD CHASSIS CAB FLANGE KIT, LONG ARMS, REAR-WHEEL DRIVE, TWIN WHEELS

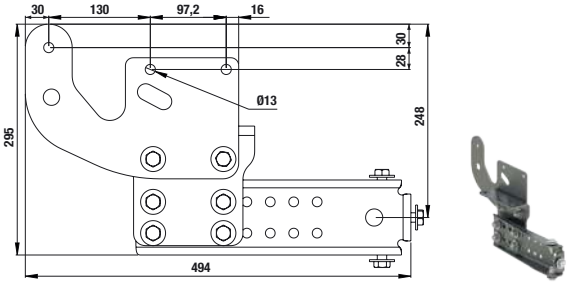

T785 00 96
RENAULT XDD PLATFORM CAB FLANGE KIT, SHORT ARMS, FRONT-WHEEL DRIVE, SINGLE WHEELS

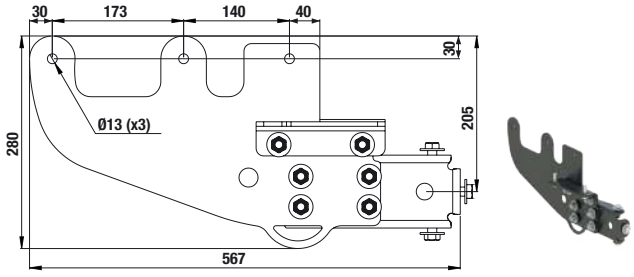

T785 00 97
RENAULT XDD PLATFORM CAB FLANGE KIT, LONG ARMS, FRONT-WHEEL DRIVE, SINGLE WHEELS

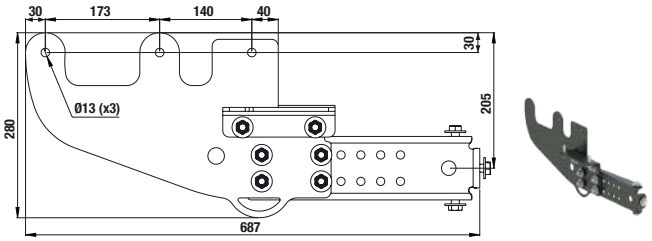

4. COUPLING OFFSETS

T785 0100
CORNER PLATE KIT TO OFFSET THE COUPLING BY 28 MM ABOVE OR BELOW THE PROFILES: ≤ 3.5T - T783 35 00 ≤ 5.5T - T785 35 00

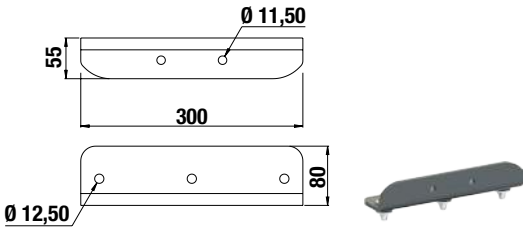

T783 0105
MULTI-HEIGHT COUPLING KIT TO OFFSET THE COUPLING UP TO 112 MM UP OR DOWN, COMPATIBLE WITH PROFILE: ≤ 3.5T - T783 35 00

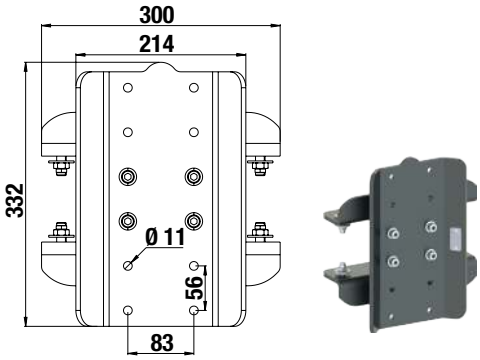

ACCESSORIES

- Sturdy accessories that are easy to fit
- Fitted by the bodybuilder or retrofitted at the customer's request
- A range that evolves with your customers' needs, by trade

T524 44 00
UNIVERSAL LIGHT MOUNTING SUPPORT LH / RH
- BOLT-ON FOR LIGHT & MEDIUM TOWBEAMS
- BENDS FOR LIGHT PROTECTION GRILLE SUPPORTS
- CATAPHORESIS PROTECTION

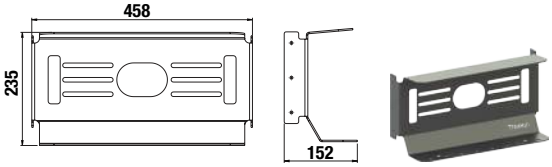

T524 44 10
UNIVERSAL CAGED LIGHT MOUNTING SUPPORT LH / RH
- BOLT-ON FOR LIGHT & MEDIUM TOWBEAMS
- OPENING FOR HORN PASSAGE
- CATAPHORESIS PROTECTION

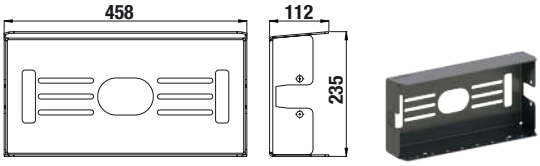

T524 45 00
MULTI-HEIGHT LICENCE PLATE HOLDER
- BOLT-ON FOR LIGHT & MEDIUM TOWBEAMS
- COMPATIBLE WITH MULTI-HEIGHT PLATE
- PRE-DRILLED AT THE TOP FOR CAMERA BRACKET T524 48 05
- 2 SOCKET MOUNTS
- DRILLING FOR PLATE LIGHT
- CATAPHORESIS PROTECTION



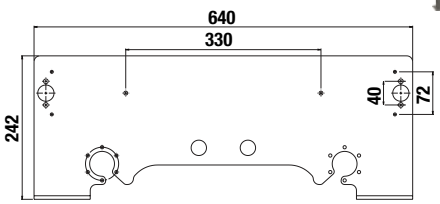

T524 45 20
EXTRA-WIDE LICENCE PLATE HOLDER
- BOLT-ON FOR LIGHT & MEDIUM TOWBEAMS
- PRE-DRILLED AT THE TOP AND BOTTOM FOR CAMERA BRACKET T524 48 05
- 2 SOCKET MOUNTS
- DRILLING FOR PLATE LIGHT
- CATAPHORESIS PROTECTION



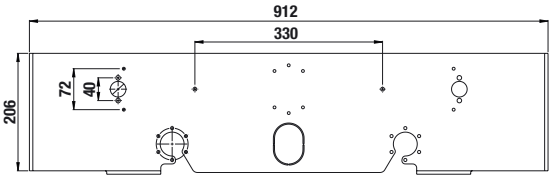

T524 10 00
SINGLE FOLDING STEP
- BOLT-ON FOR LIGHT & MEDIUM TOWBEAMS
- GALVANISED

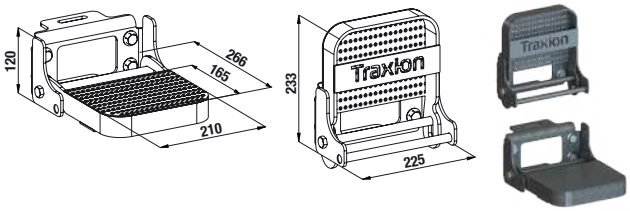

T524 47 00
LASHING RING
- TO BE FIXED ON LIGHT & MEDIUM TOWBEAMS
- FOR LOADS OVERHANGING THE DROPSIDE (PVC PIPES, WELDED MESH...)
- COMPATIBLE WITH ALL STRAP HOOKS
- CATAPHORESIS PROTECTION

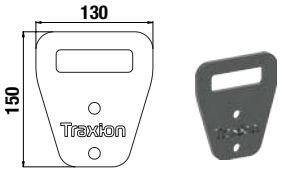

T524 48 00
CAMERA BRACKET
- FOR MIXED HOOKS
- CATAPHORESIS PROTECTION

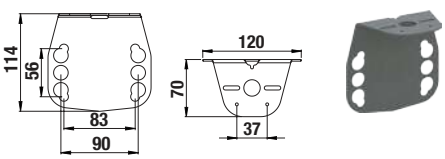

T524 48 05
UNIVERSAL CAMERA BRACKET
- TO BE FITTED ON PLATE HOLDER T524 44 05
- CATAPHORESIS PROTECTION

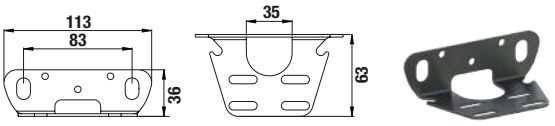

04

UNDER-RUN PROTECTION

FIXED NON-TOWING URP ≤ 12 T	94
FIXED TOWING URP ≤ 12 T	96
FIXED NON-TOWING URP	98
FIXED TOWING URP	100
FIXED URP ON LOW TOWBEAM	102
FIXED TOWING URP FOR INCLINED SIDES	104
FIXED TOWING URP, FLANGES WITH BENDS INSIDE CHASSIS FRAMES	106
FIXED AND TOWING URP FOR RAISED RIGIDS	108
FIXED URP FOR MOUNTED FORK-LIFT	110
PRE-ASSEMBLED MANUAL LIFT-UP STEEL URP	112
PRE-ASSEMBLED MANUAL LIFT-UP ALUMINIUM URP	114
PRE-ASSEMBLED MANUAL LIFT-UP STEEL URP FOR RAISED RIGIDS	116
PRE-ASSEMBLED MANUAL LIFT-UP ALUMINIUM URP FOR RAISED RIGIDS	118
MANUAL LIFT-UP URP FOR RAISED RIGIDS	120
MANUAL LIFT-UP URP FOR MOUNTED FORK-LIFT	122
HYDRAULIC LIFT-UP URP	124
INCLINED HYDRAULIC URP FOR FINISHERS	126
HORIZONTAL HYDRAULIC URP	128
FIXED ALUMINIUM C-SHAPE URP FOR SEMI-TRAILERS	130
TELESCOPIC MOUNTED FORK-LIFT URP FOR SEMI-TRAILERS	132

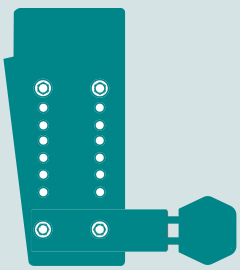

URP
FIXED NON-TOWING ≤ 12 T

≤ 12 T

MADE IN Traxion

APPROVED **R58.03** E2 2015/208

+ LIGHTER - LESS CO_2

APPROVED MOUNTING WITH SCREWS **M10 - M12**

PROFIL ACIER Traxion

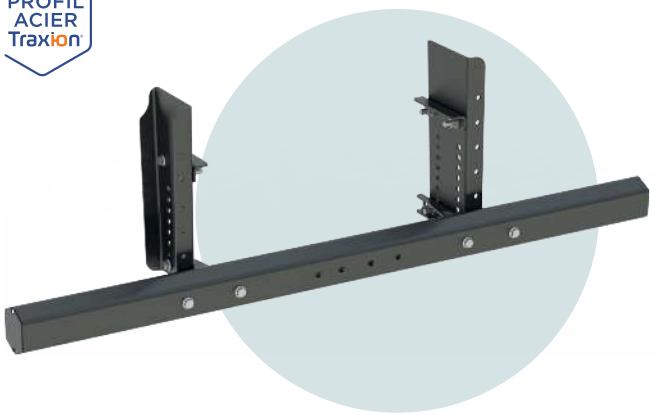

MOUNTING EXAMPLE

CHOICE OF PROFILE

STEEL ALUMINIUM



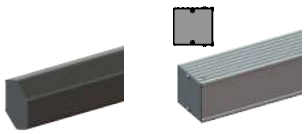

HEXAGONAL SQUARE

OTHER POSSIBLE COMBINATIONS



C-SHAPE

BUILD YOUR KIT

① CHOICE OF PROFILE



② CHOICE OF FLANGES



③ ARMS



DESCRIPTION

- Approved as URP for rigids ≤ 12 tonnes and agricultural trailers
- 6 profiles to choose from: steel or aluminium
- 2 flange heights: 380 and 500 mm
- 1 arm length: 524 mm
- Corner plates adjustable to a 5° angle
- 30% lighter than solutions currently on the market
- Simplified installation with flange without top bend
- 100% bolted assembly
- Pre-drilled flanges for URP height adjustment
- Holes for fixing accessories
- Cataphoresis coating
- Chassis fitting in M10 or M12
- Optional screw sets

	Description	L (mm)	H (mm)	Wt. (kg)	Part number
①	Hexagonal steel profile + supports	1 900	126	33	T709 03 04
		2 100		36	T709 03 03
		2 250		38	T709 03 00
	Square aluminium profile + supports	2 400	120	30	T709 05 00
	Machined aluminium C-shape profile + supports		250		T709 04 00
	Unmachined aluminium C-shape profile + supports				T709 04 10
②	Short flanges (pair)		380	12	T709 05 20
	Long flanges (pair)		500	15	T709 05 80
③	Arms (pair)	524		11	T709 14 00

Screw sets	Wt. (kg)	Part number
M10	4	T520 50 15
M12	4	T520 50 25

MOUNTING DIMENSIONS

1. PROFILES

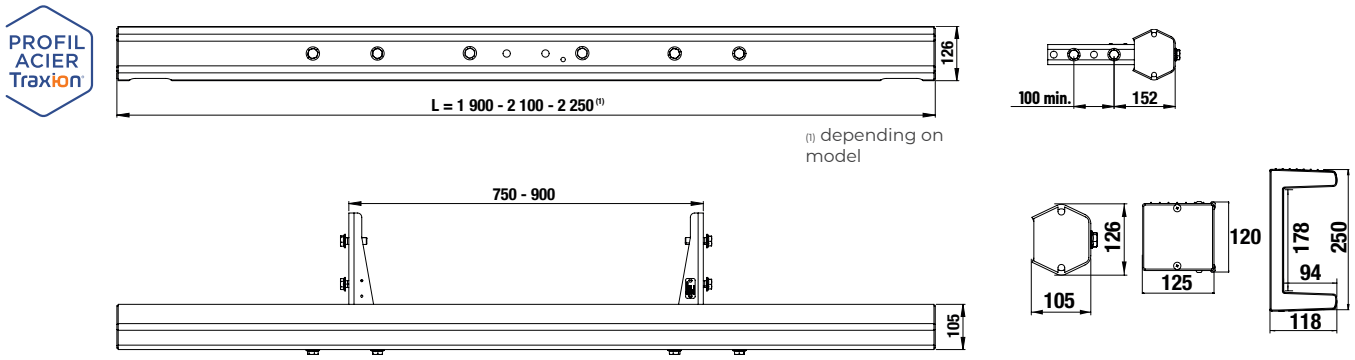

2. FLANGES

Suspension	Flanges 380 mm	Flanges 500 mm
	H Max. height	
	≤ 673 mm	≤ 793 mm
	≤ 723 mm	≤ 843 mm

380 MM FLANGES

500 MM FLANGES

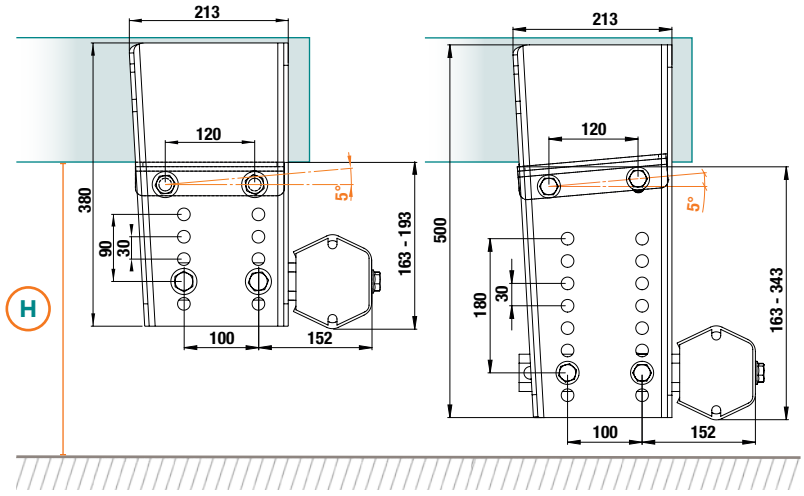

3. MOUNTINGS

FITTED ON	HEXAGONAL STEEL	ALUMINIUM SQUARE	ALUMINIUM C-SHAPE
BRACKET	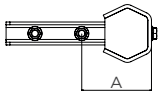	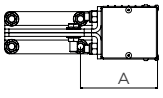	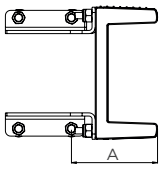
FLANGES	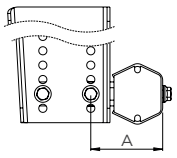	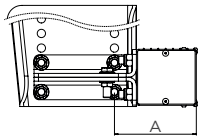	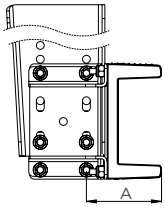
ARMS	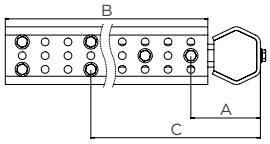	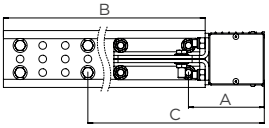	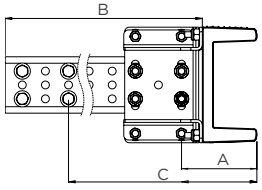

Profiles	A (mm)	B (mm)	C (mm) max
	152	524	452
	168		468
	195		495

URP
FIXED TOWING ≤ 12 T

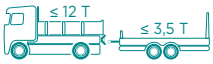

MADE IN Traxion

APPROVED **R55**

APPROVED **R58.03** E2 2015/208

+ LIGHTER - LESS CO_2

APPROVED MOUNTING WITH SCREWS **M10 - M12**

PROFIL ACIER Traxion



MOUNTING EXAMPLE



OTHER POSSIBLE COMBINATIONS

BUILD YOUR KIT

1. CHOICE OF PROFILE
2. CHOICE OF FLANGES
3. ARMS
4. COUPLING PACK(1)






DESCRIPTION

- Approved as towing URP for rigids ≤ 12 tonnes and agricultural trailers
- 3 profile lengths
- 2 flange heights: 380 and 500 mm
- 1 arm length: 524 mm
- Optional R55 coupling kit
- 30% lighter than solutions currently on the market
- 100% bolted assembly
- Pre-drilled flanges for URP height adjustment
- Cataphoresis coating
- Chassis fitting in M10 or M12
- Optional screw sets

	Description	L (mm)	H (mm)	Wt. (kg)	Part number
1	Hexagonal steel profile + supports	1 900	126	33	T709 03 04
		2 100		36	T709 03 03
		2 250		38	T709 03 00
2	Short flanges (pair)		380	12	T709 05 20
	Long flanges (pair)		500	15	T709 05 80
3	Arms (pair)	524		17	T709 14 00
4	COMFORT coupling pack			7	T709 53 40
	BALL coupling pack			6,9	T709 53 42

Part number	T709 03 00	T709 03 03	T709 03 04
D / DC (kN)	26,60		
S (kg)	320		

Screw sets	Wt. (kg)	Part number
M10	4	T520 50 15
M12	4	T520 50 25

(1) R55 approval only with COMFORT coupling pack T709 53 40

MOUNTING DIMENSIONS

1. PROFILES

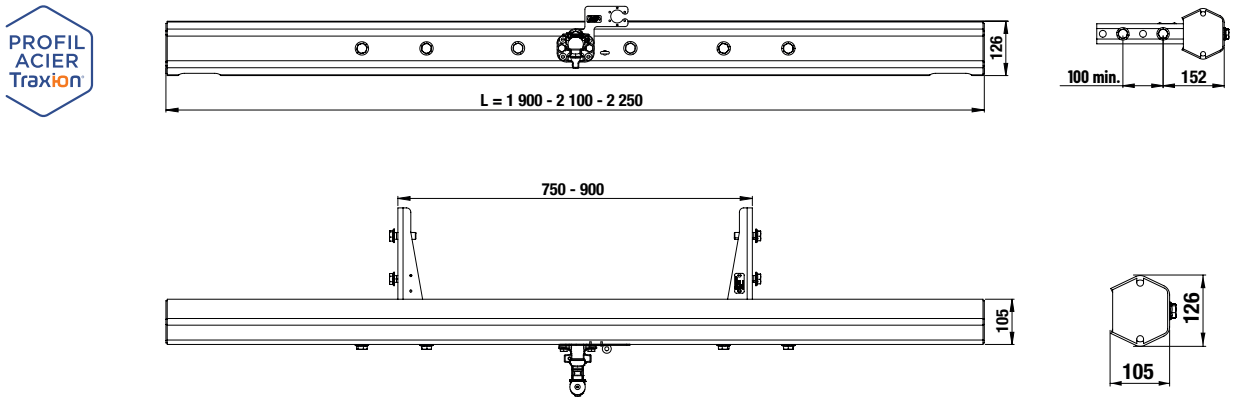

2. FLANGES

Suspension	Flanges 380 mm	Flanges 500 mm
	H Max. height	
	≤ 673 mm	≤ 793 mm
	≤ 723 mm	≤ 843 mm

380 MM FLANGES

500 MM FLANGES

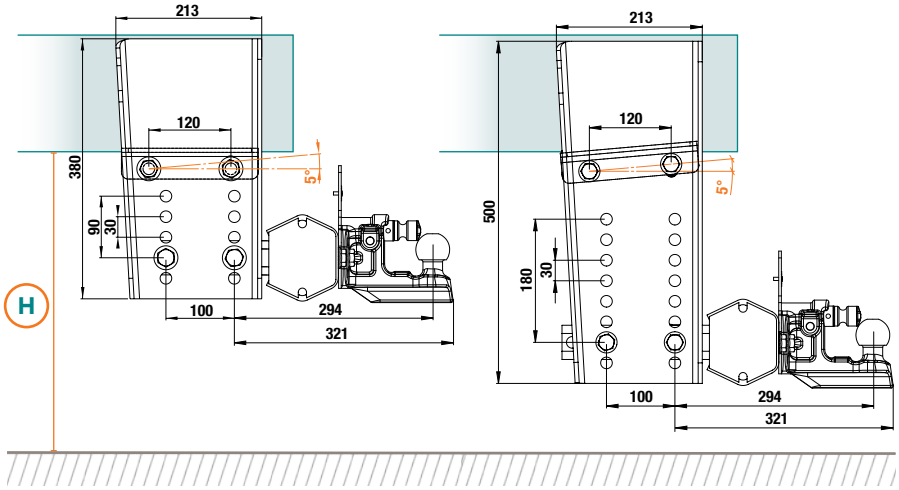

3. MOUNTINGS

FITTED ON HEXAGONAL STEEL PROFIL ACIER Traxion

A (mm)	B (mm)	C (mm)	D (mm) max
321	294	524	621

BRACKET

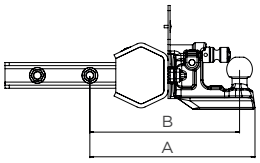

FLANGES

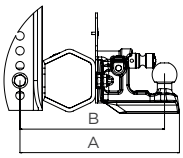

ARMS

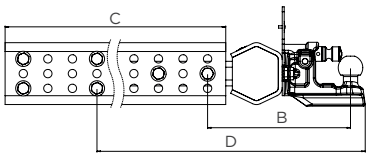

04

URP
FIXED NON-TOWING

MADE IN Traxion

APPROVED R58.03

+ LIGHTER - LESS CO_2

APPROVED MOUNTING WITH SCREWS **M12 - M14 - M16**

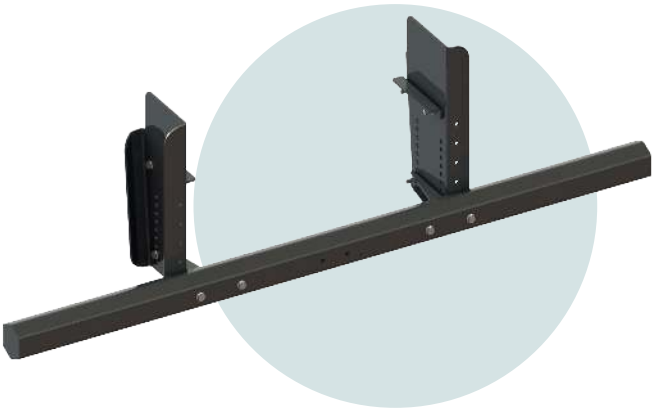

MOUNTING EXAMPLE

CHOICE OF PROFILE

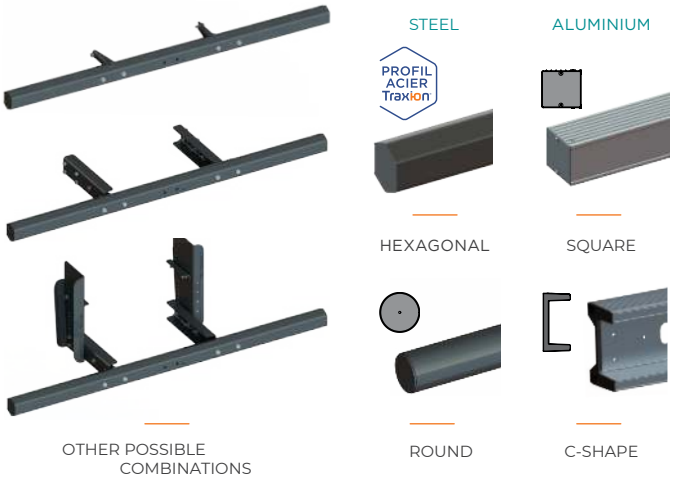

BUILD YOUR KIT



DESCRIPTION

- Approved URP assembly
- 4 profiles to choose from: steel or aluminium
- 2 flange heights: 630 and 750 mm
- 2 arm lengths: 524 and 724 mm
- 30% lighter than solutions currently on the market
- Simplified installation with flange without top bend
- 100% bolted assembly
- Pre-drilled flanges for URP height adjustment
- Holes for fixing accessories
- Cataphoresis coating
- Chassis fitting in M12, M14 and M16
- Optional screw sets

	Description	L (mm)	H (mm)	Wt. (kg)	Part number
1	Hexagonal steel profile + supports	2 320	126	50	T708 03 00
1	Round steel profile + supports	2 320	121	50	T708 06 00
1	Square aluminium profile + supports	2 400	120	35	T708 05 00
1	Machined aluminium C-shape profile + supports	2 406	250	35	T708 04 00
1	Unmachined aluminium C-shape profile + supports	2 406	250	35	T708 04 10
2	Short flanges (pair)		630	33	T708 02 20
2	Long flanges (pair)		750	38	T708 02 80
3	Short arms (pair)	524		17	T708 14 00
3	Long arms (pair)	724		23	T708 14 10
3	Plates for C-shape arms(1)			15,5	T708 04 35

Screw sets	Wt. (kg)	Part number
M12	4	T520 52 12
M14	5,5	T520 52 14
M16	7	T520 52 16

MOUNTING DIMENSIONS

1. PROFILES

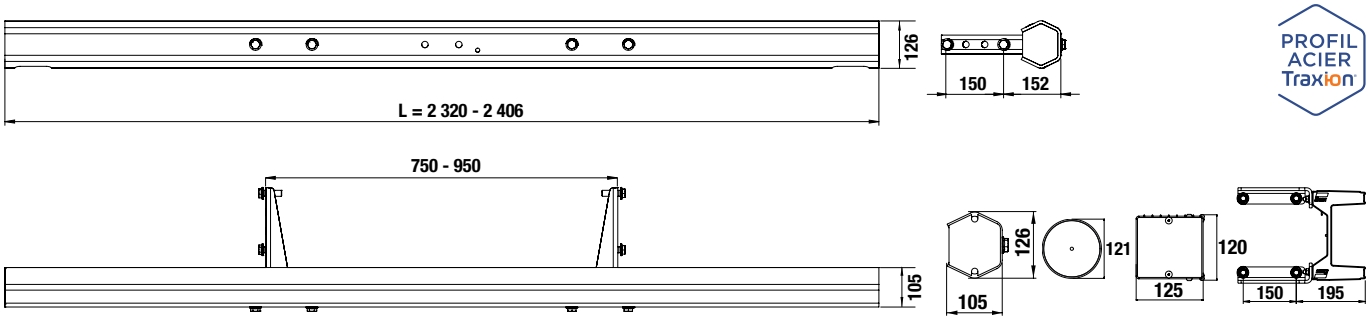

2. FLANGES

Suspension	Flanges 630 mm	Flanges 750 mm
	H Max. height	
	≤ 853 mm	≤ 973 mm
	≤ 903 mm	≤ 1023 mm

630 MM FLANGES

750 MM FLANGES

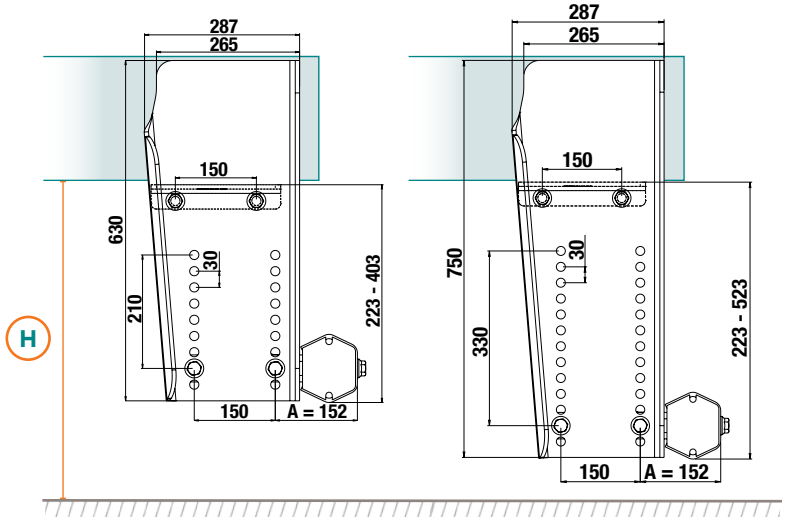

3. MOUNTINGS

Profiles	A (mm)	B (mm)	C (mm) max	D (mm)	E (mm) max
	152	524	452	724	652
	176		476		676
	168		468		668
	195		495	725	695

FITTED ON BRACKET

HEXAGONAL STEEL PROFIL ACIER Traxion

ROUND STEEL

ALUMINIUM SQUARE

ALUMINIUM C-SHAPE



FLANGES

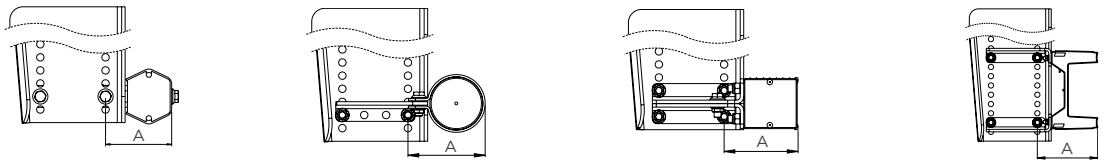

ARMS 524 MM

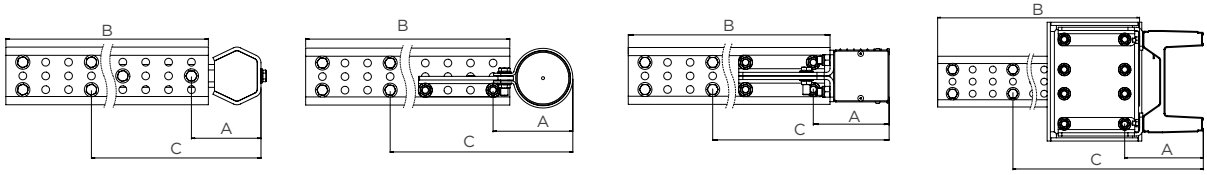

ARMS 724 MM

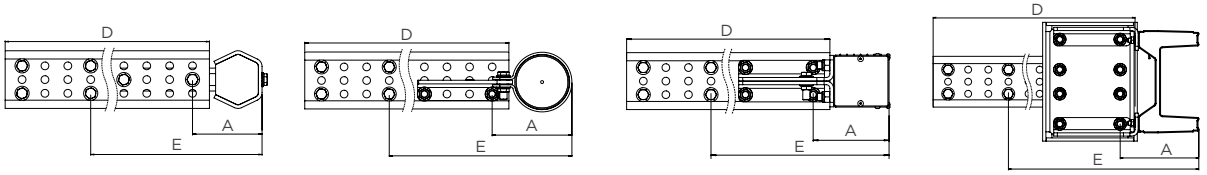

04

URP
FIXED TOWING

≤ 3,5 T

MADE IN Traxion | APPROVED R58.03 | APPROVED R55(1)

+ LIGHTER - LESS CO_2

APPROVED MOUNTING WITH SCREWS IN **M12 - M14 - M16**

PROFIL ACIER Traxion

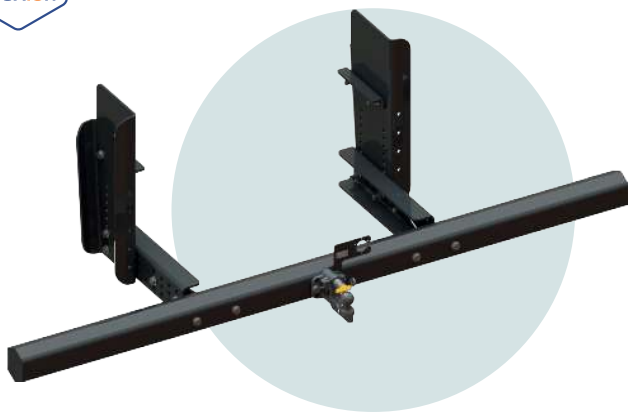

MOUNTING EXAMPLE



OTHER POSSIBLE COMBINATIONS

BUILD YOUR KIT

1 PROFILE



2 FLANGES



3 ARMS



4 COUPLING PACK(1)



DESCRIPTION

- Approved URP + coupling assembly
- Optional R55 coupling kit
- 2 flange heights: 630 and 750 mm
- 2 arm lengths: 524 and 724 mm
- 30% lighter than solutions currently on the market
- Simplified installation with flange without top bend
- 100% bolted assembly
- Pre-drilled flanges for URP height adjustment
- Holes for fixing accessories
- Cataphoresis coating
- Chassis fitting M12, M14 and M16
- Optional screw sets

Part number	T708 03 00
D / DC (kN)	32
S (kg)	390

	Description	L (mm)	H (mm)	Wt. (kg)	Part number
1	Hexagonal steel profile + supports	2 320	126	50	T708 03 00
2	Short flanges (pair)		630	33	T708 02 20
	Long flanges (pair)		750	38	T708 02 80
3	Short arms (pair)	524		17	T708 14 00
	Long arms (pair)	724		23	T708 14 10
4	COMFORT coupling pack			6	T708 53 40(1)
	BALL coupling pack			5,9	T708 53 42

Screw sets	Wt. (kg)	Part number
M12	4	T520 52 12
M14	5,5	T520 52 14
M16	7	T520 52 16

(1) R55 approval only with COMFORT coupling pack T708 53 40

MOUNTING DIMENSIONS

1. PROFILE

PROFIL ACIER Traxion

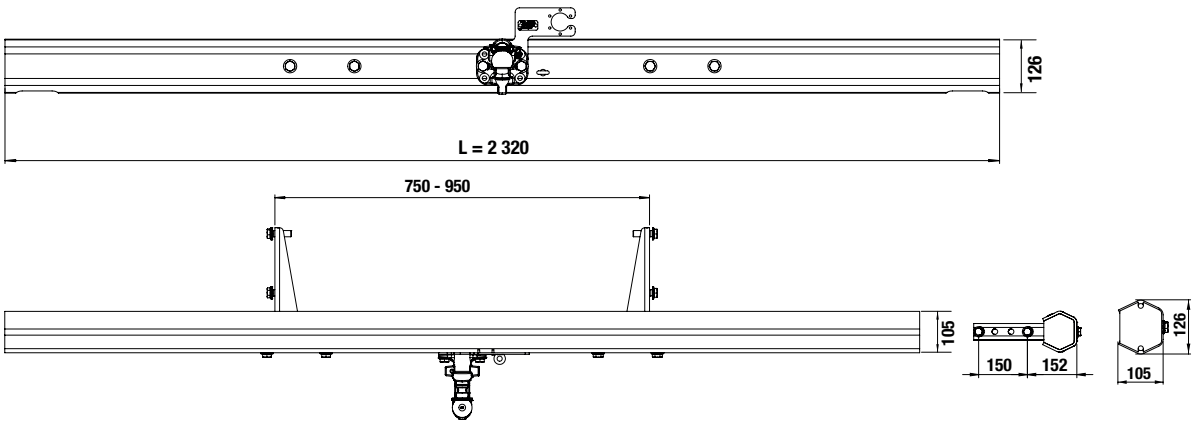

2. FLANGES

Suspension	Flanges 630 mm	Flanges 750 mm
	H Max. height	
	≤ 853 mm	≤ 973 mm
	≤ 903 mm	≤ 1023 mm

630 MM FLANGES

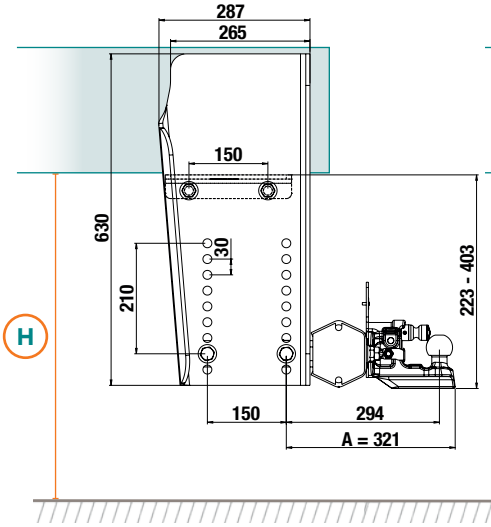

750 MM FLANGES

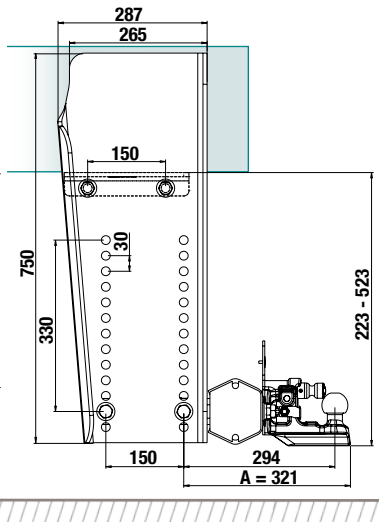

3. MOUNTINGS

FITTED ON HEXAGONAL STEEL PROFIL ACIER Traxion

A (mm)	B (mm)	C (mm)	D (mm) max	E (mm)	F (mm) max
321	294	524	621	724	821

BRACKET

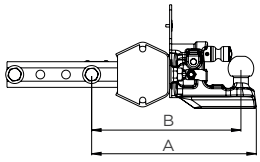

FLANGES

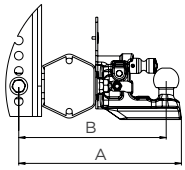

ARMS 524 MM

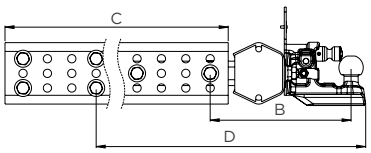

ARMS 724 MM

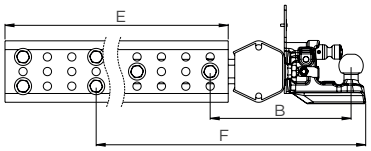

04

URP
FIXED ON LOW TOWBEAM

≤ 3,5 T

MADE IN Traxion | APPROVED R58.03 | APPROVED R55(1)

+ LIGHTER - LESS CO_2

APPROVED MOUNTING WITH SCREWS IN **M14 - M16**



NEW



WITH BNA COUPLING



WITH DIN 50 COUPLING



SOCKET MOUNT OPTION

DESCRIPTION

- Eco-responsible design, made in France
- Simplified low mounting at the end of the chassis
- Compatible with N3G 4x4 vehicles
- 4 flange configurations to suit different mountings
- Chassis fixing in M14 or M16
- Compatible with TRAXION couplings with pneumatic opening
- GEOMET-treated assembly screws
- Bolted towbeam with factory pre-assembled URP, for vehicles ≥ 18 T
- Chassis width up to 870 mm
- Optional fixed or telescopic galvanised socket mounts

Description	L (mm)	H (mm)	Wt. (kg)	Part number
Hexagonal half-profile kit on TRAXION low towbeam	2 320 - 2450	126	50	**T708 03 80**

Screw sets		Part number
M14		**T520 54 82**
M16	L50	**T520 54 92**
	L60	**T520 54 94**
	L70	**T520 54 96**

MOUNTING DIMENSIONS

1. 1/2 PROFILES FITTED

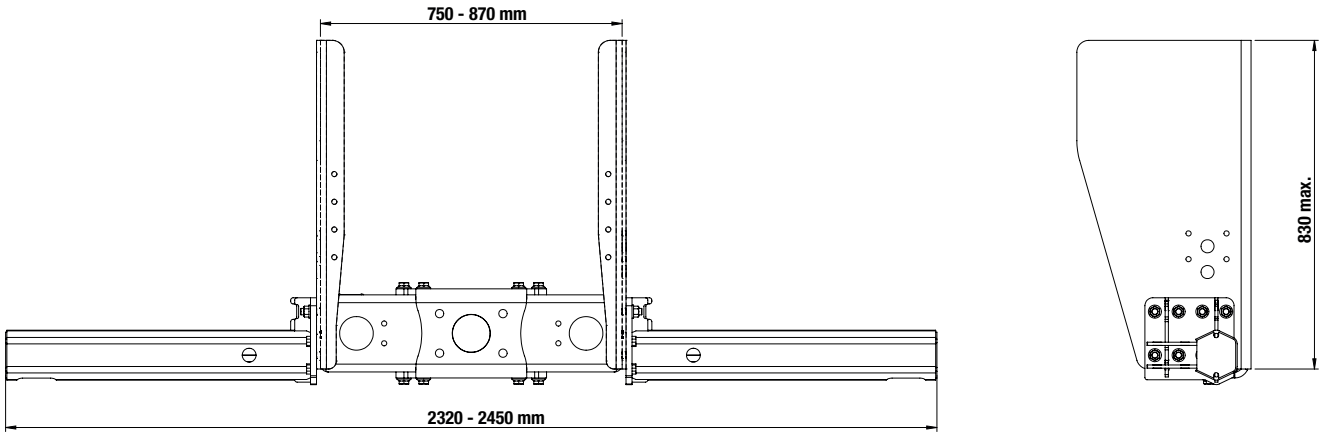

2. COMPATIBLE FLANGES

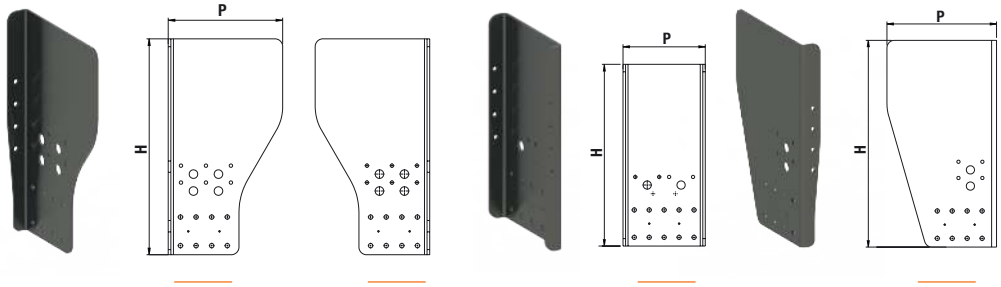

1* STANDARD FLANGE (1 REVERSIBLE BEND)

2*

7 STRAIGHT FLANGE (2 BENDS)

8 END OF CHASSIS (1 BEND)

DIRECTION OF TRAVEL

Code	Manufacturer memo			Towbeam body	Shims		Screws Towb. / Flanges
	Manufacturer	Hole Ø	Width (mm)	Kg	Th. (mm)	Kg	16 x M16 (Kg)
10	Man	14	762	53			3,3
15	Ford / Iveco / Scania		770		2x4	1,8	
25	Daf	16	790	55			
55	Renault / Volvo / Daimler	14	850	57			
57			854		2x2	1	
63	Ford		866		2x8	3,7	

Code	H (mm)	1 and 2		7		8	
		P (mm)	Kg	P (mm)	Kg	P (mm)	Kg
36	360					380	17
43	430						20
50	500	380	22	330	32		24
56	560		25		35		27
62	625		28		40		30
65	650	420	31			420	34
69	690		34				36
73	730		44				48
83	830	440	52			440	56

URP
FIXED TOWING
FOR INCLINED SIDES

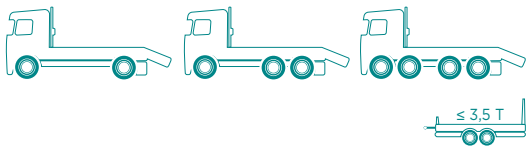

MADE IN Traxion | APPROVED R58.03 | APPROVED R55(1)

PROFIL ACIER Traxion

+ LIGHTER - LESS CO_2

APPROVED MOUNTING WITH SCREWS IN **M12 - M14 - M16**





ILLUSTRATION WITHOUT COUPLING PACK

DESCRIPTION

- Approved URP + coupling assembly
- Optional R55 coupling kit
- Special flanges for rigids with inclined / chamfered sides (e.g. plant transporters, tow trucks)
- 30% lighter than solutions currently on the market
- 100% bolted assembly
- Pre-drilled flanges for URP height adjustment
- Cataphoresis coating
- Chassis fitting in M12(2), M14 and M16
- Optional screw sets

(2) only for rigids ≤ 18 T

BUILD YOUR KIT

① PROFILE



② FLANGES



③ COUPLING PACK(1)



	Description	L (mm)	H (mm)	Wt. (kg)	Part number
①	Hexagonal steel profile + supports	2 320	126	50	**T708 03 00**
②	Flanges (pair)		424	16,7	**T708 09 20**
③	COMFORT coupling pack			6	**T708 53 40**(1)
	BALL coupling pack			5,9	**T708 53 42**(1)

Part number	T708 03 00
D / DC (kN)	32
S (kg)	390

Screw sets	Wt. (kg)	Part number
M12	4	**T520 52 12**
M14	5,5	**T520 52 14**
M16	7	**T520 52 16**

(1) R55 approval only with COMFORT coupling pack T708 53 40

MOUNTING DIMENSIONS

1. PROFILE

PROFIL ACIER Traxion

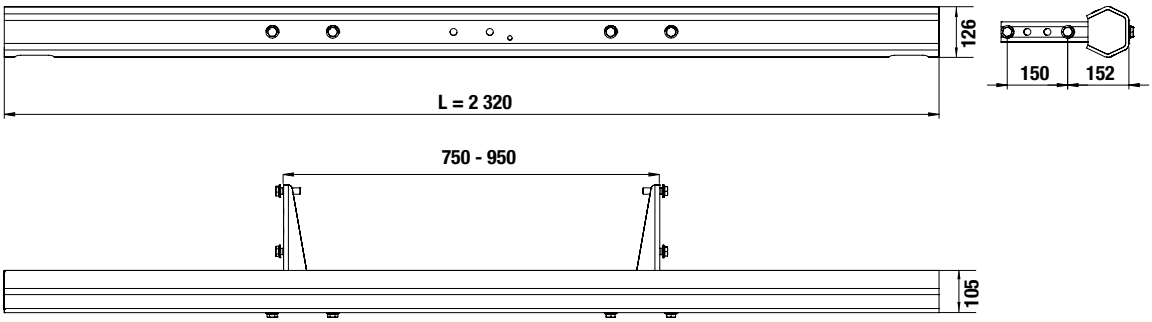

2. FLANGES

Suspension	Flanges 424 mm
	H Max. height
	≤ 723 mm
	≤ 773 mm

424 MM FLANGES(3)

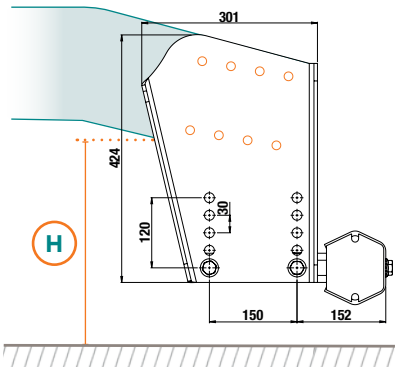

TOWING VERSION

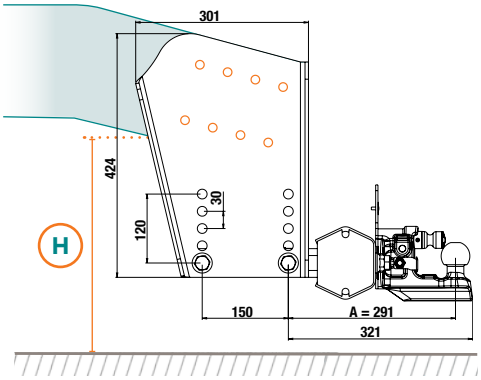

(3) to be drilled by the bodybuilder

H = HEIGHT BETWEEN THE GROUND AND THE LOWEST FIXING HOLES OF THE CHASSIS FRAME

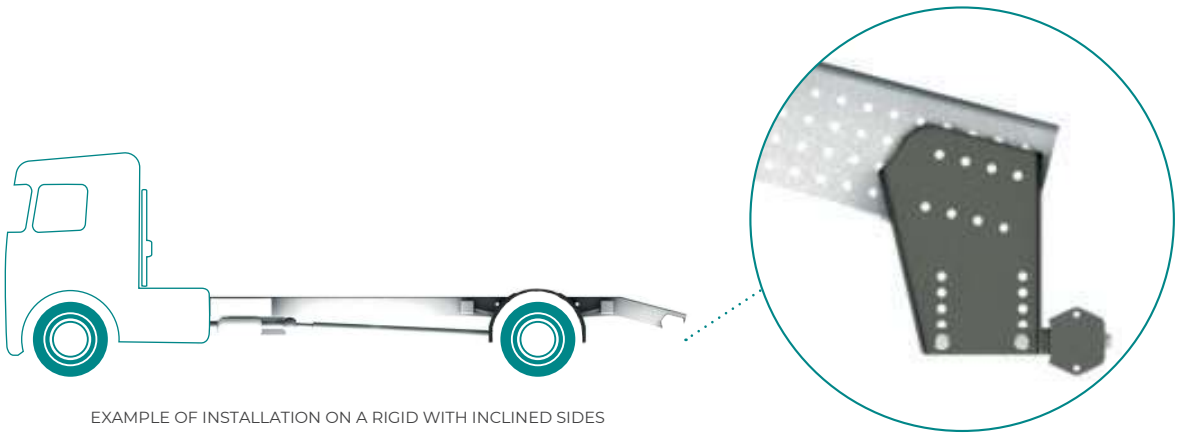

EXAMPLE OF INSTALLATION ON A RIGID WITH INCLINED SIDES

04

URP
FIXED TOWING
FLANGES WITH BENDS INSIDE CHASSIS FRAMES

≤ 3,5 T

MADE IN Traxion | APPROVED R58.03 | APPROVED R55(1)

+ LIGHTER - LESS CO_2

APPROVED MOUNTING WITH SCREWS IN **M14 - M16**

PROFIL ACIER Traxion

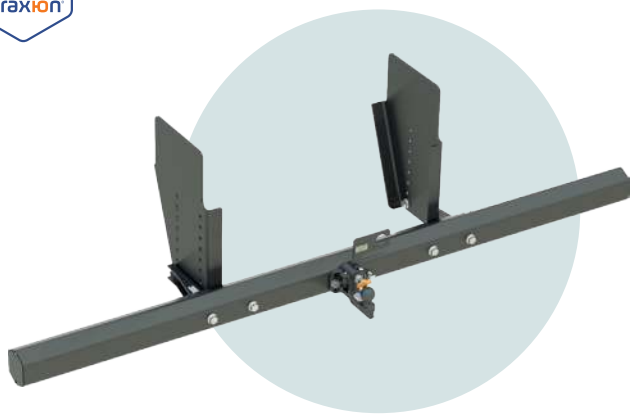



ILLUSTRATION WITHOUT COUPLING PACK

DESCRIPTION

- Approved URP + coupling assembly
- Optional R55 coupling kit
- Special flanges with bends inside the chassis frame
- 30% lighter than solutions currently on the market
- 100% bolted assembly
- Pre-drilled flanges for URP height adjustment
- Cataphoresis coating
- Chassis fitting in M14 and M16
- Optional screw sets

Part number	T708 03 00
D / DC (kN)	32
S (kg)	390

BUILD YOUR KIT

① PROFILE



② FLANGES



③ COUPLING PACK(1)



	Description	L (mm)	H (mm)	Wt. (kg)	Part number
①	Hexagonal steel profile + supports	2 320	126	50	T708 03 00
②	Flanges (pair)		536	11,7	T708 02 90
③	COMFORT coupling pack			6	T708 53 40(1)
	BALL coupling pack			5,9	T708 53 42(1)

Screw sets	Wt. (kg)	Part number
M14	5,5	T520 52 14
M16	7	T520 52 16

(1) R55 approval only with COMFORT coupling pack T708 53 40

MOUNTING DIMENSIONS

1. PROFILE

PROFIL ACIER Traxion

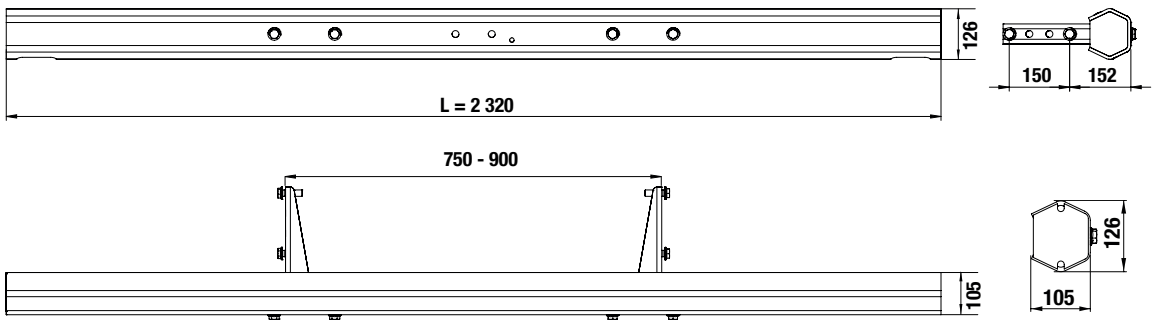

2. FLANGES

Suspension	Flanges 536 mm
	H Max. height
	≤ 833 mm
	≤ 883 mm

(2) to be drilled by the bodybuilder

536 MM FLANGES(2)

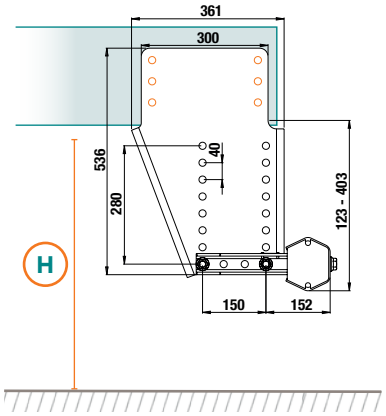

TOWING VERSION

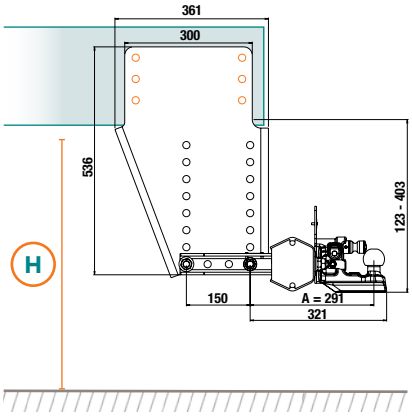

04

URP
FIXED AND TOWING
RAISED RIGIDS

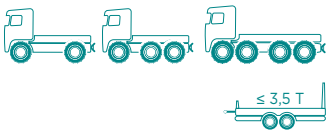

MADE IN Traxion

APPROVED **R58.03**

APPROVED **R55**(1) + LIGHTER - LESS CO_2

PROFIL ACIER Traxion

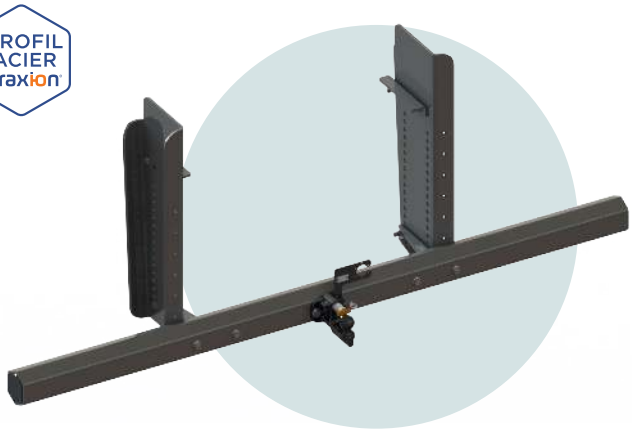



ILLUSTRATION
WITHOUT COUPLING PACK

BUILD YOUR KIT

DESCRIPTION

- Approved URP + coupling assembly
- Optional R55 coupling kit
- Special version for 4x4 and raised rigids
- 2 flange heights: 825 and 915 mm
- 30% lighter than solutions currently on the market
- 100% bolted assembly
- Simplified installation with flange without top bend
- Pre-drilled flanges for URP height adjustment
- Holes for fixing accessories
- Cataphoresis coating
- Chassis fitting in M16
- Optional screw set

① PROFILE



② FLANGES



③ COUPLING PACK(1)



	Description	L (mm)	H (mm)	Wt. (kg)	Part number
①	Hexagonal profile + supports 2 320	126	50	**T708 03 10**
②	Short flanges (pair)	825	45	**T708 05 15**
	Long flanges (pair)	915	50	**T708 05 65**
③	COMFORT coupling pack		6	**T708 53 40**(1)
	BALL coupling pack		5,9	**T708 53 42**(1)

Part number	T708 03 10
D / DC (kN)	32
S (kg)	390

Screw set	Wt. (kg)	Part number
M16	7	**T520 52 16**

(1) R55 approval only with COMFORT coupling pack T708 53 40

MOUNTING DIMENSIONS

1. PROFILE

PROFIL ACIER Traxion

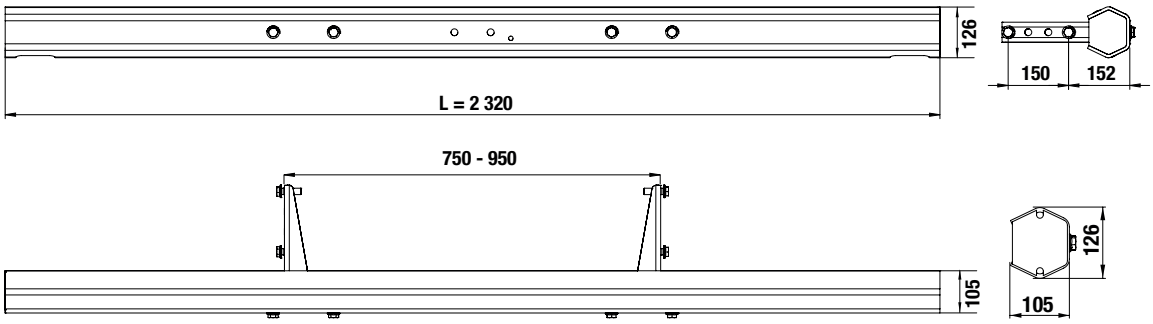

2. FLANGES

Suspension	Flanges 825 mm	Flanges 915 mm
	H Max. height	
	≤ 1 068 mm	≤ 1 158 mm
	≤ 1 118 mm	≤ 1 208 mm

825 MM FLANGES

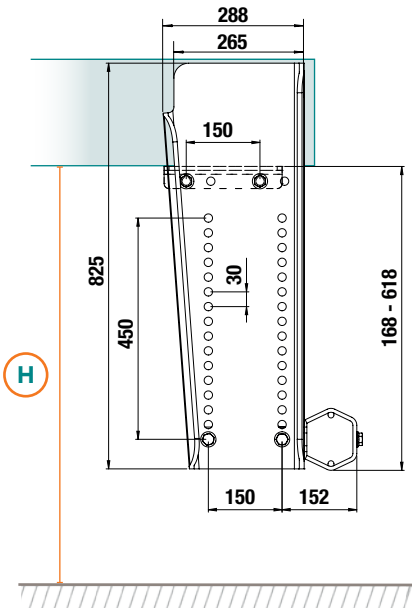

915 MM FLANGES

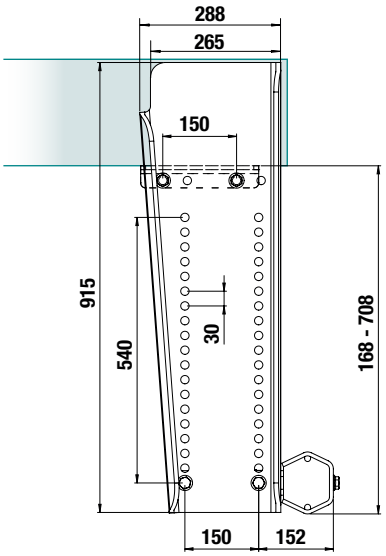

TOWING VERSION

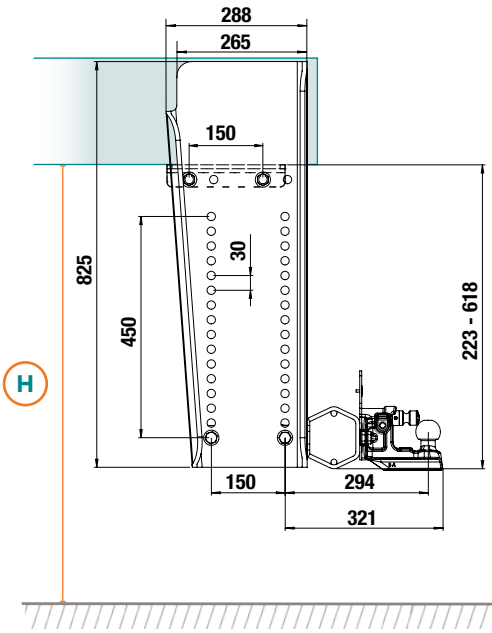

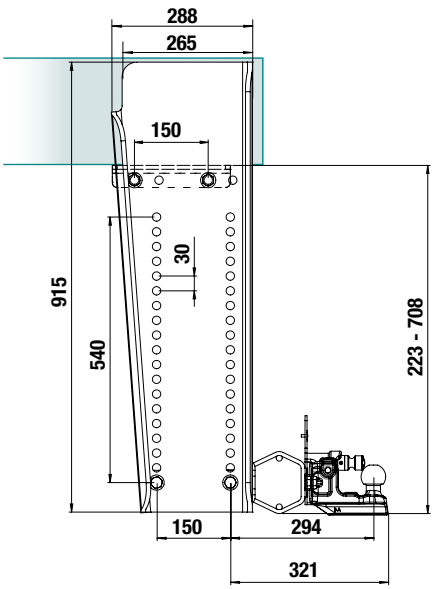

04

URP
FIXED
MOUNTED FORK-LIFT

MADE IN Traxion | APPROVED R58.03 | + LIGHTER - LESS CO_2

PROFIL ACIER Traxion

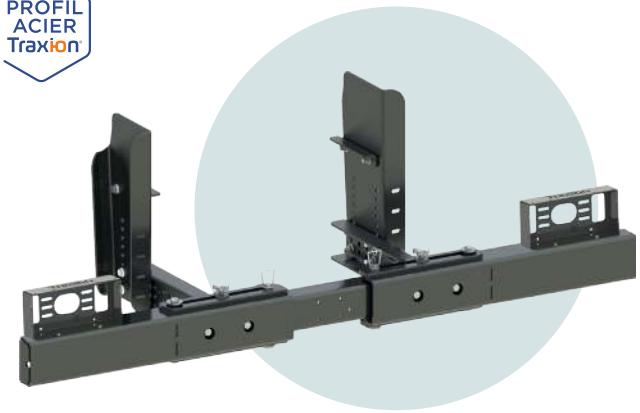

URP UNFOLDED



URP FOLDED



LIGHT MOUNTING SUPPORTS OPTION

DESCRIPTION

- Approved URP assembly
- Universal device for all makes of rigids and mounted fork-lifts
- URP folds at the ends to let the fork-lift wheels pass
- Simplified installation with flange without top bend
- 1 flange height: 630 mm
- 1 arm length: 524 mm
- 100% bolted assembly
- Holes for fixing accessories
- Cataphoresis coating
- Chassis fitting in M14 or M16
- Optional screw sets and light mounting supports

Description	L (mm)	H (mm)	Wt. (kg)	Part number
Articulated folding URP profile for mounted fork-lifts	2 318	156	95	**T756 03 00**
Flanges (pair)		630	33	**T708 02 20**
Arms (pair)	524		17	**T708 14 00**
Light mounting support kit			5,5	**T755 05 30**

Screw sets	Wt. (kg)	Part number
M14	5,5	**T520 52 14**
M16	7	**T520 52 16**

MOUNTING DIMENSIONS

1. PROFILE

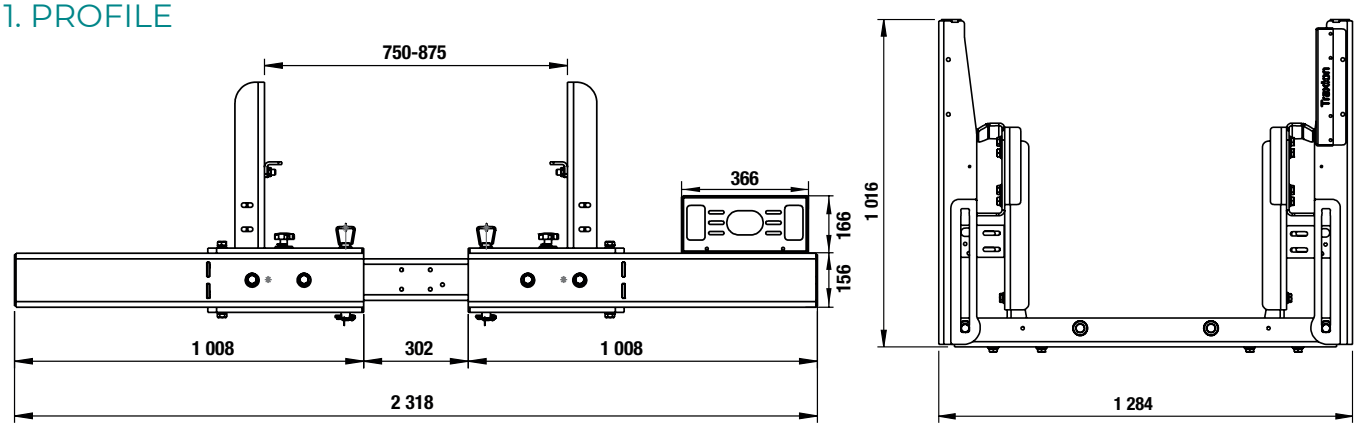

2. FLANGES

Suspension	FLANGES 630 mm
	H Max. height
	≤ 850 mm
	≤ 900 mm

630 MM FLANGES

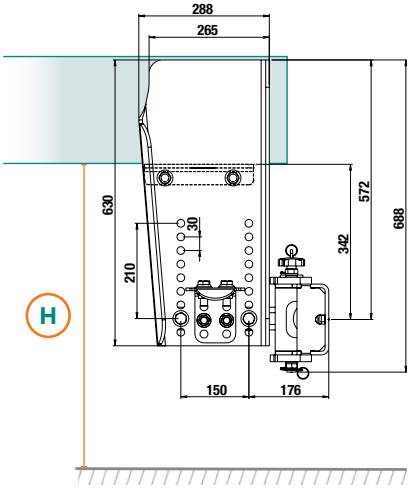

3. MOUNTINGS

FITTED ON

FLANGES

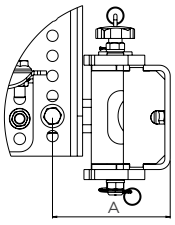

A (mm)	B (mm) max	C (mm)
176	476	524

ARMS

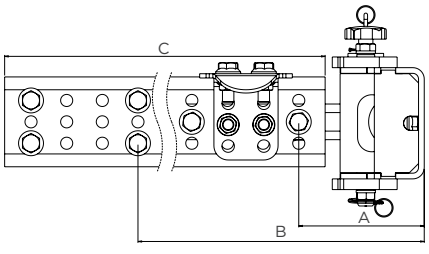

URP
STEEL LIFT-UP
PRE-ASSEMBLED MANUAL

PROFIL ACIER Traxion

MADE IN Traxion

APPROVED **R58.03**

+ LIGHTER
- LESS CO_2

APPROVED MOUNTING WITH SCREWS **M14 - M16**



ILLUSTRATION OF LONG ARM MODEL

NEW



2 ASSISTANCE GAS STRUTS



2 AUTOMATIC LOCKS



HEXAGONAL STEEL

BUILD YOUR KIT

① PROFILE



② ARMS + PLATES + GAS STRUTS + LOCKS



DESCRIPTION

- Supplied with arms mounted on plates
- Fixed to the chassis with only 4 screws
- Easier installation thanks to optimised kinematics
- Lifting assistance handle included
- 2 arm lengths
- 3 pre-drilled plates for all manufacturers
- 30% lighter than solutions currently on the market
- 100% bolted assembly
- Assistance by gas struts protected inside the arms
- Automatic locking in up and down positions
- Cataphoresis coating
- Chassis fitting in M14 and M16
- Optional screw sets

	Description	L (mm)	H (mm)	Wt. (kg)	Part number
①	Hexagonal steel profile + supports + handle	2 320	126	50	**T720 03 00**
	Short arm kit for hexagonal profile				
②	Renault Trucks / Scania / Volvo Trucks plates		522	53,7	**T720 23 14**
②	Daf / Daimler Truck plates			52,2	**T720 23 24**
②	Iveco / Man plates			52,5	**T720 23 34**
	Long arm kit for hexagonal profile				
②	Renault Trucks / Scania / Volvo Trucks plates		652	58,2	**T720 23 10**
②	Daf / Daimler Truck plates			57,8	**T720 23 20**
②	Iveco / Man plates			58,1	**T720 23 30**

Screw sets	Wt. (kg)	Part number
M14	5,5	**T520 52 14**
M16	7	**T520 52 16**

MOUNTING DIMENSIONS

1. PROFILE

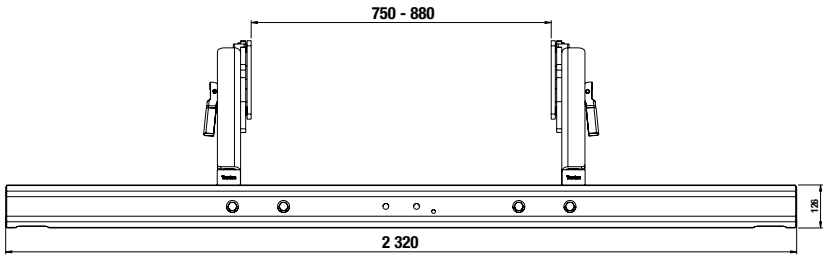

PROFIL ACIER Traxion

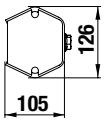

2. ARMS

Susp.	Arms 522 mm	Arms 652 mm
	H Max. height	
	≤ 675 mm	≤ 744 mm
	≤ 725 mm	≤ 794 mm

522 MM ARMS

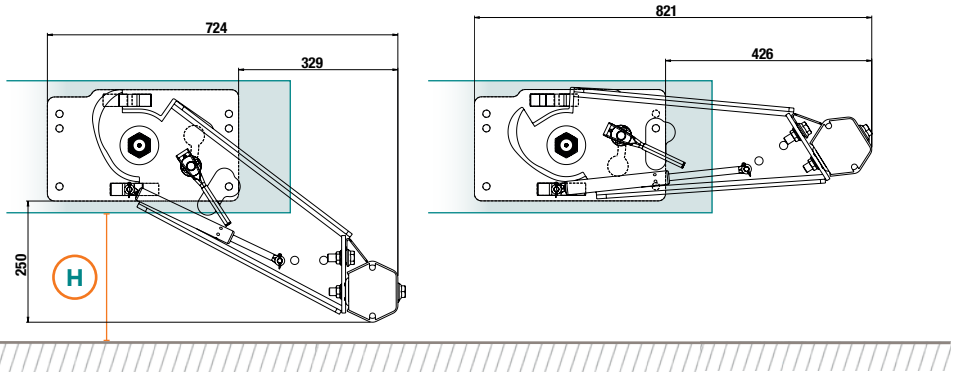

652 MM ARMS

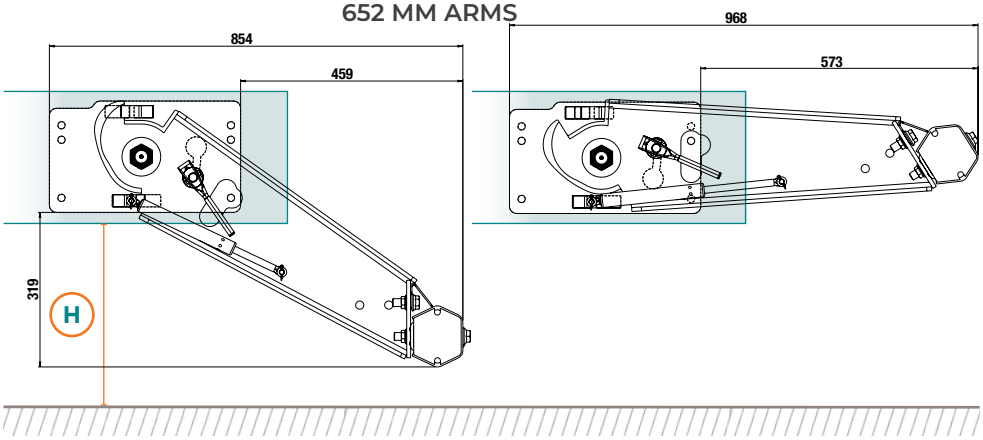

04

3. PLATES

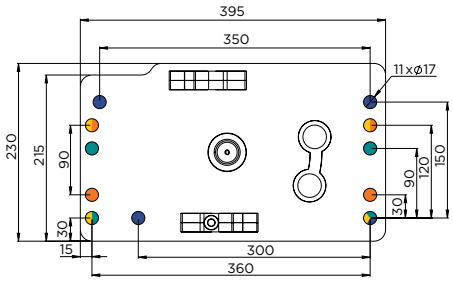

DAF V1 / DAF V2 / DAF V3
DAIMLER TRUCK

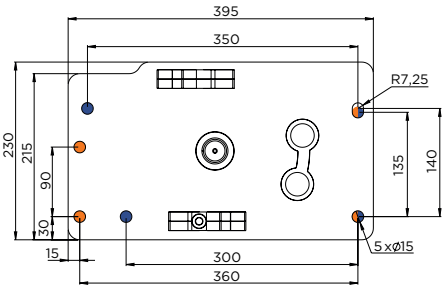

IVECO
MAN

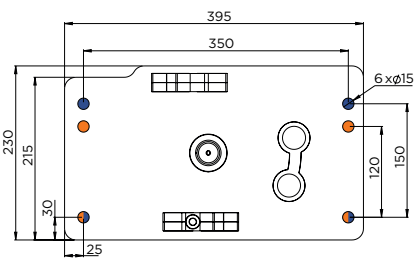

RENAULT TRUCKS
SCANIA
VOLVO TRUCKS

URP
ALUMINIUM LIFT-UP
PRE-ASSEMBLED MANUAL

MADE IN Traxion

APPROVED **R58.03**

+ LIGHTER - LESS CO_2

APPROVED MOUNTING WITH SCREWS **M14 - M16**



ILLUSTRATION OF LONG ARM MODEL

NEW



2 ASSISTANCE GAS STRUTS



2 AUTOMATIC LOCKS



ALUMINIUM SQUARE

BUILD YOUR KIT

① PROFILE



② ARMS + PLATES + GAS STRUTS + LOCKS



DESCRIPTION

- Supplied with arms mounted on plates
- Fixed to the chassis with only 4 screws
- Easier installation thanks to optimised kinematics
- 2 arm lengths
- 3 pre-drilled plates for all manufacturers
- 30% lighter than solutions currently on the market
- 100% bolted assembly
- Assistance by gas struts protected inside the arms
- Automatic locking in up and down positions
- Cataphoresis coating
- Chassis fitting in M14 and M16
- Optional screw sets

	Description	L (mm)	H (mm)	Wt. (kg)	Part number
①	Square aluminium profile + supports	2 400	120	35	**T720 04 00**
	Short arm kit for square profile				
②	Renault Trucks / Scania / Volvo Trucks plates		522	51,7	**T720 23 14**
②	Daf / Daimler Truck plates			51,4	**T720 23 24**
②	Iveco / Man plates			51,7	**T720 23 34**
	Long arm kit for square profile				
②	Renault Trucks / Scania / Volvo Trucks plates		652	57,3	**T720 23 10**
②	Daf / Daimler Truck plates			57	**T720 23 20**
②	Iveco / Man plates			57,3	**T720 23 30**

Screw sets	Wt. (kg)	Part number
M14	5,5	**T520 52 24**
M16	7	**T520 52 26**

MOUNTING DIMENSIONS

1. PROFILE

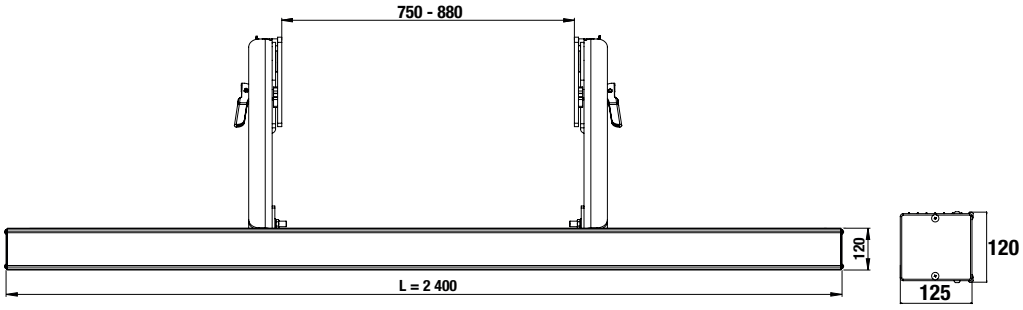

2. ARMS

Susp.	Arms 522 mm	Arms 652 mm
	H Max. height	
	≤ 675 mm	≤ 744 mm
	≤ 725 mm	≤ 794 mm

522 MM ARMS

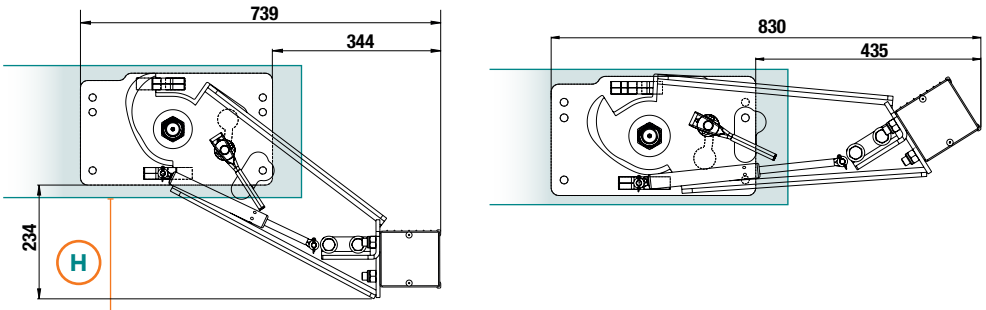

652 MM ARMS

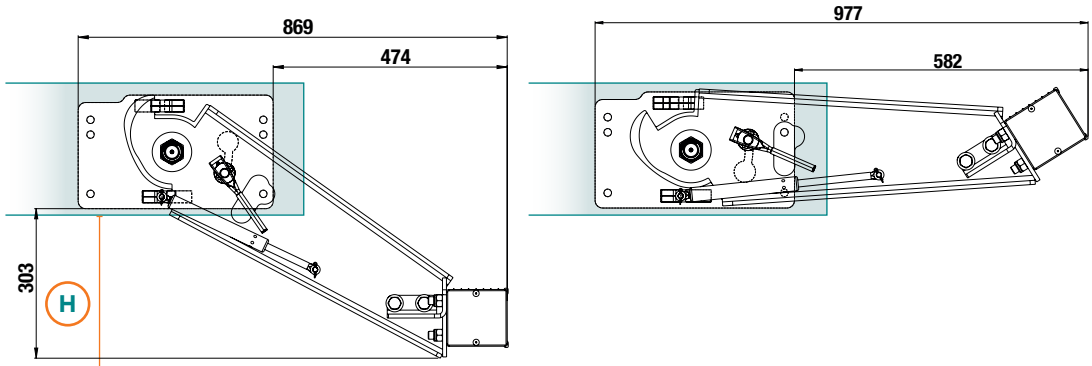

3. PLATES

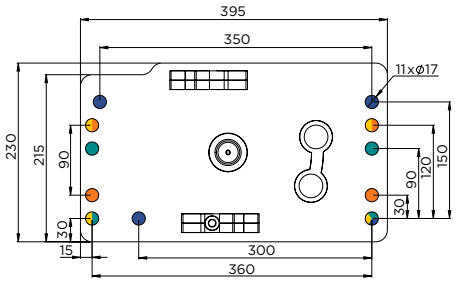

DAF V1 / DAF V2 / DAF V3
DAIMLER TRUCK

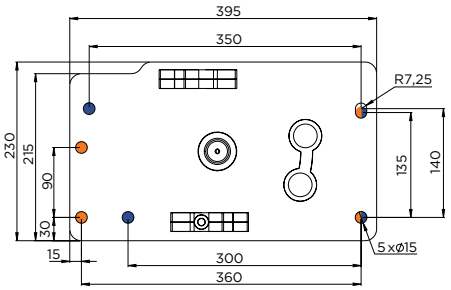

IVECO
MAN

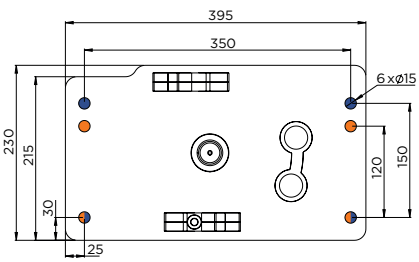

RENAULT TRUCKS
SCANIA
VOLVO TRUCKS

URP
STEEL LIFT-UP
PRE-ASSEMBLED MANUAL FOR RAISED RIGIDS

PROFIL ACIER Traxion

MADE IN Traxion

APPROVED **R58.03**

+ LIGHTER - LESS CO_2

APPROVED MOUNTING WITH SCREWS **M14 - M16**



NEW



2 ASSISTANCE GAS STRUTS



HEXAGONAL STEEL



2 AUTOMATIC LOCKS



UNDRILLED FLANGES

DESCRIPTION

- Special version for 4x4 and raised rigids
- Supplied with arms mounted on plates
- Fixed to the chassis with only 4 screws
- Easier installation thanks to optimised kinematics
- Lifting assistance handle included
- 2 arm lengths
- 3 pre-drilled plates for all manufacturers
- 30% lighter than solutions currently on the market
- 100% bolted assembly
- Assistance by gas struts protected inside the arms
- Automatic locking in up and down positions
- Cataphoresis coating
- Chassis fitting in M14 and M16
- Optional screw sets

BUILD YOUR KIT

1. PROFILE



2. UNIVERSAL FLANGES



3. ARMS + PLATES + GAS STRUTS + LOCKS



	Description	L (mm)	H (mm)	Wt. (kg)	Part number
1	Hexagonal steel profile + supports + handle	2 320	126	50	**T720 03 00**
2	Lowering kit for raised vehicles: universal flanges		480	34	**T720 20 00**
3	Renault Trucks / Scania / Volvo Trucks plates, short arms		731	86,5	**T720 23 14**
3	Renault Trucks / Scania / Volvo Trucks plates, long arms		860	91	**T720 23 10**

Screw sets	Wt. (kg)	Part number
M14	5,5	**T520 52 24**
M16	7	**T520 52 26**

MOUNTING DIMENSIONS

1. PROFILE

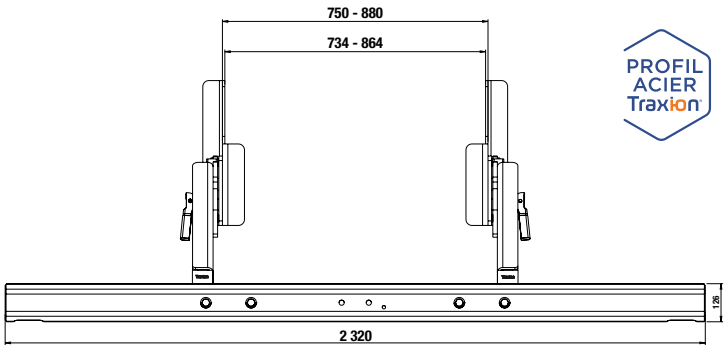

PROFIL ACIER Traxion

2. ARMS

Susp.	Arms 522 mm	Arms 652 mm
	H Max. height	
	≤ 970 mm	≤ 1039 mm
	≤ 1020 mm	≤ 1089 mm

522 MM ARMS

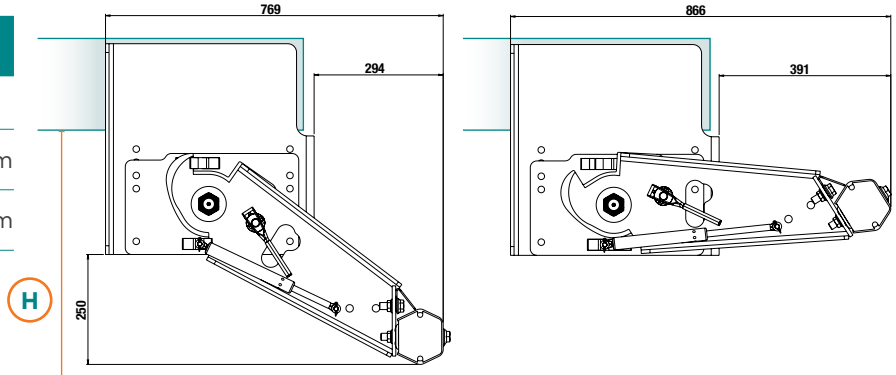

652 MM ARMS

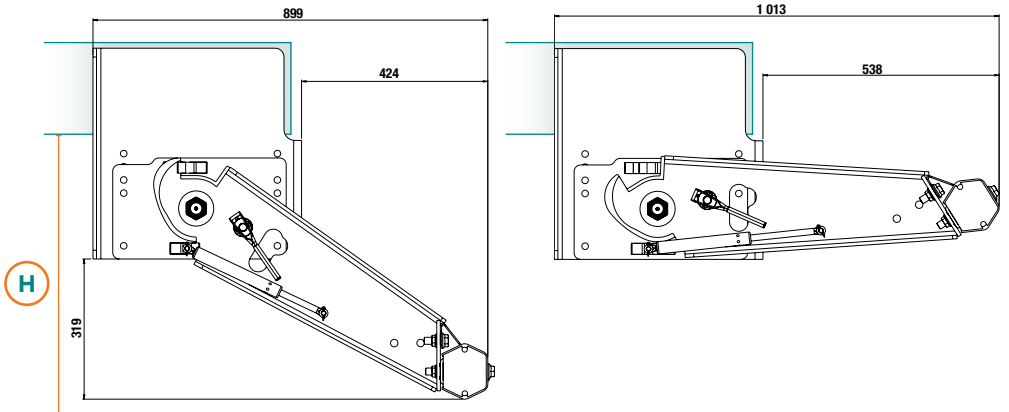

3. PLATES + FLANGES

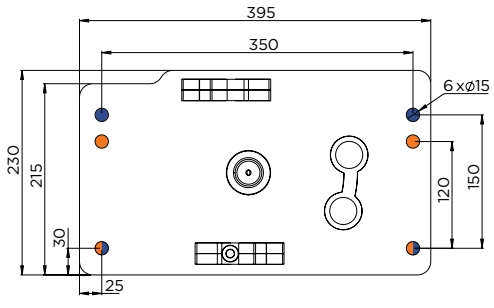

RENAULT TRUCKS
SCANIA
VOLVO TRUCKS

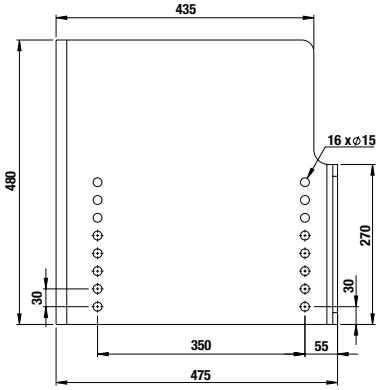

04

URP
ALUMINIUM LIFT-UP
PRE-ASSEMBLED MANUAL FOR RAISED RIGIDS

MADE IN Traxion

APPROVED **R58.03**

+ LIGHTER - LESS CO_2

APPROVED MOUNTING WITH SCREWS **M14 - M16**



NEW



2 ASSISTANCE GAS STRUTS



ALUMINIUM SQUARE



2 AUTOMATIC LOCKS



UNDRILLED FLANGES

DESCRIPTION

- Special version for 4x4 and raised rigids
- Supplied with arms mounted on plates
- Fixed to the chassis with only 4 screws
- Easier installation thanks to optimised kinematics
- 2 arm lengths
- 3 pre-drilled plates for all manufacturers
- 30% lighter than solutions currently on the market
- 100% bolted assembly
- Assistance by gas struts protected inside the arms
- Automatic locking in up and down positions
- Cataphoresis coating
- Chassis fitting in M14 and M16
- Optional screw sets

BUILD YOUR KIT

① PROFILE



② UNIVERSAL FLANGES



③ ARMS + PLATES + GAS STRUTS + LOCKS



	Description	L (mm)	H (mm)	Wt. (kg)	Part number
①	Square aluminium profile + supports	2 400	120	35	**T720 04 00**
②	Lowering kit for raised vehicles: universal flanges		480	34	**T720 20 00**
③	Renault Trucks / Scania / Volvo Trucks plates, short arms		731	86,5	**T720 23 14**
③	Renault Trucks / Scania / Volvo Trucks plates, long arms		860	91	**T720 23 10**

Screw sets	Wt. (kg)	Part number
M14	5,5	**T520 52 24**
M16	7	**T520 52 26**

MOUNTING DIMENSIONS

1. PROFILE

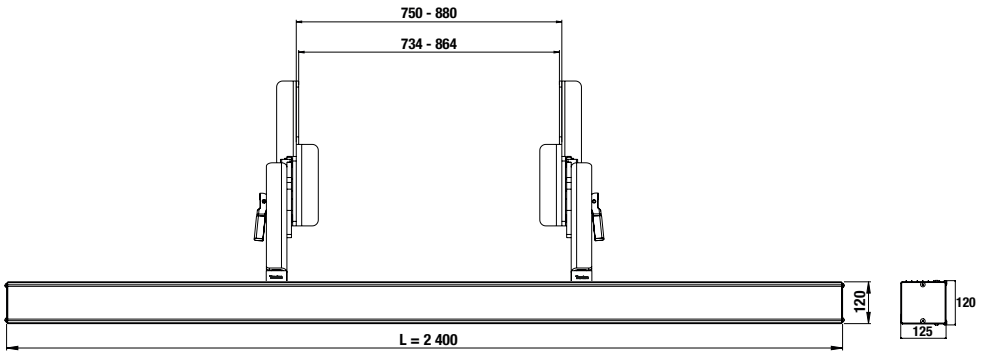

2. ARMS

Susp.	Arms 522 mm	Arms 652 mm
	H Max. height	
	≤ 934 mm	≤ 1003 mm
	≤ 984 mm	≤ 1053 mm

522 MM ARMS

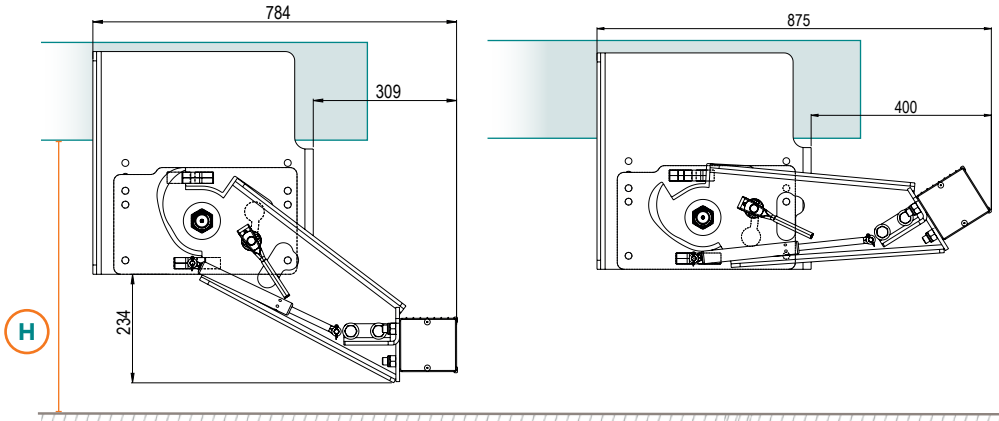

652 MM ARMS

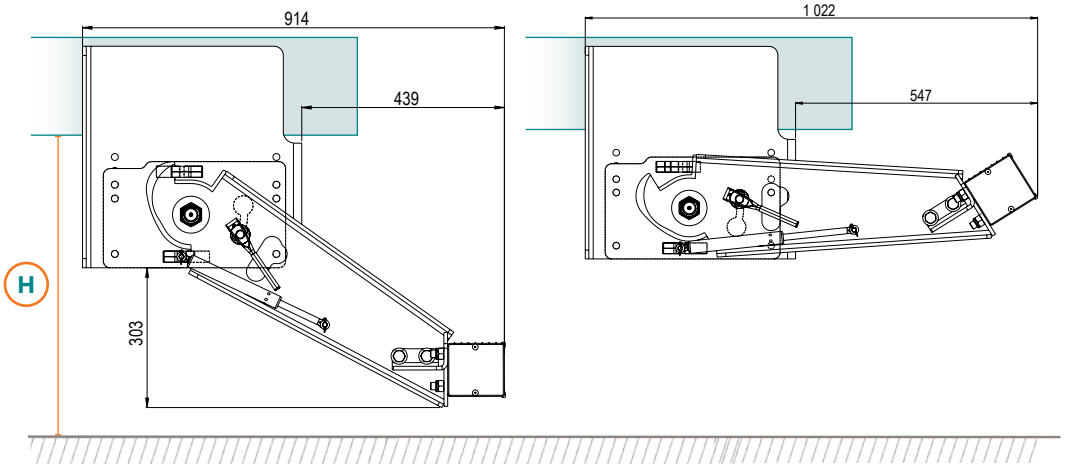

3. PLATES + FLANGES

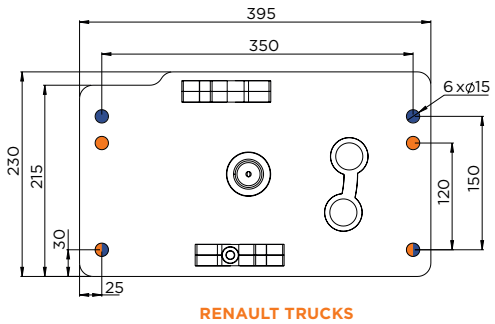

RENAULT TRUCKS
SCANIA
VOLVO TRUCKS

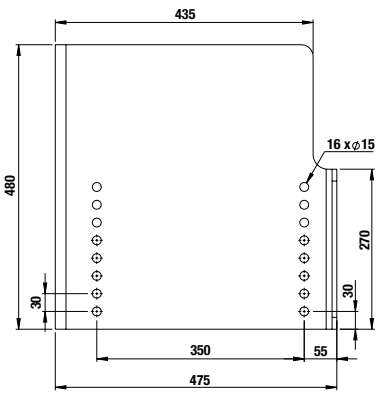

04

URP
MANUAL LIFT-UP
RAISED RIGIDS

MADE IN Traxion | APPROVED R58.03 | + LIGHTER - LESS CO_2

PROFIL ACIER Traxion





2 ASSISTANCE GAS STRUTS



2 AUTOMATIC LOCKS



HANDLE OPTION

BUILD YOUR KIT

1 PROFILE



2 PLATES



3 ARMS



4 GAS STRUTS

5 HANDLE



DESCRIPTION

- Special version for 4x4 and raised rigids
- Fixed to the chassis with only 4 screws
- Conventional kinematics
- Lifting assistance handle included
- 1 arm length
- 2 pre-drilled plates for all manufacturers
- 30% lighter than solutions currently on the market
- 100% bolted assembly
- Assistance by gas struts protected inside the arms
- Automatic locking in up and down positions
- Cataphoresis coating
- Chassis fitting in M14 and M16
- Optional screw sets

	Description	L (mm)	H (mm)	Wt. (kg)	Part number
1	Hexagonal steel profile + supports	2 320	126	50	**T716 03 00**
2	DAF and Iveco plates	395	260	20	**T716 05 30**
2	MAN, Daimler Truck, Scania, Renault and Volvo Trucks plates				**T716 05 40**
3	Arms (pair)		830	34	**T716 14 30**
4	Gas strut 1,100 N			0,5	**T716 14 86**
5	Handle			1	**T716 03 50**

Screw sets	Wt. (kg)	Part number
M14	5,5	**T520 52 24**
M16	7	**T520 52 26**

MOUNTING DIMENSIONS

1. PROFILE

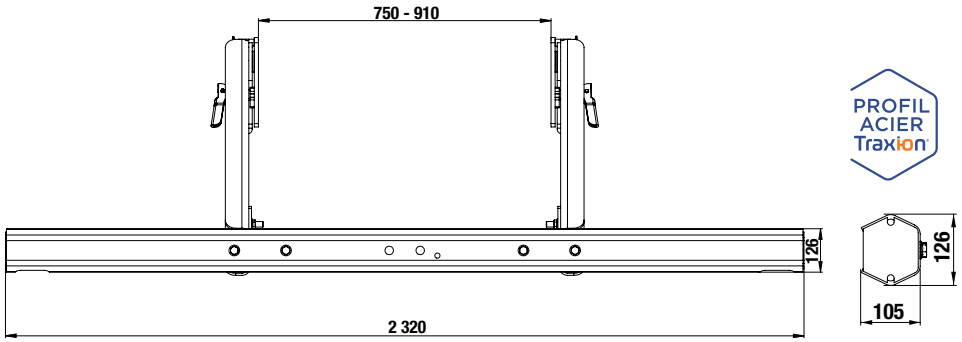

2. ARMS

Suspension	Arms 830 mm
	H Max. height
	≤ 872 mm
	≤ 922 mm

830 MM ARMS

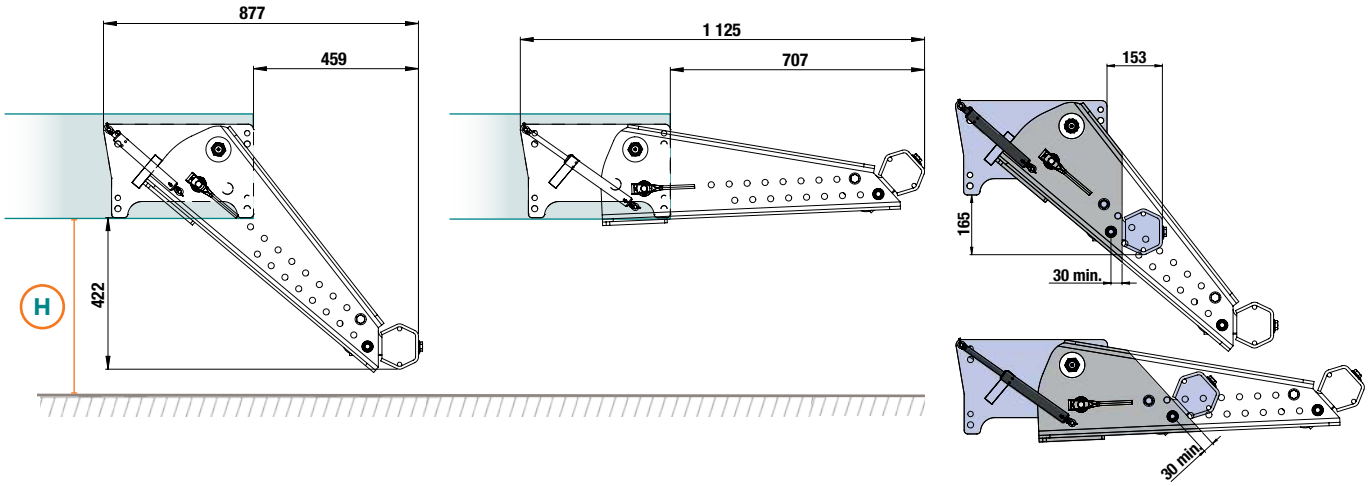

THE ARMS CAN BE SHORTENED EVERY 50 MM DOWN TO A MINIMUM OF 30 MM FROM THE LAST HOLE

3. PLATES

DAF
IVECO

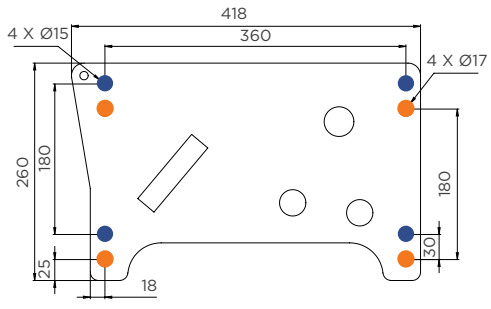

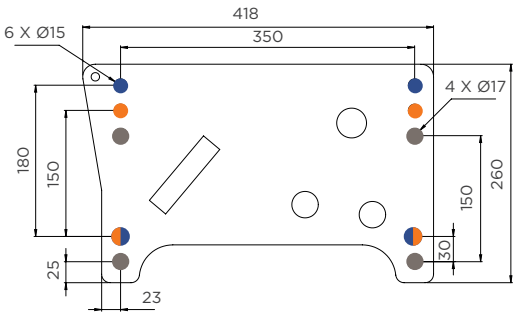

MAN
DAIMLER TRUCK
RENAULT TRUCKS
SCANIA
VOLVO TRUCKS

URP
MANUAL LIFT-UP
MOUNTED FORK-LIFT

MADE IN Traxion | APPROVED R58.03 | + LIGHTER - LESS CO_2

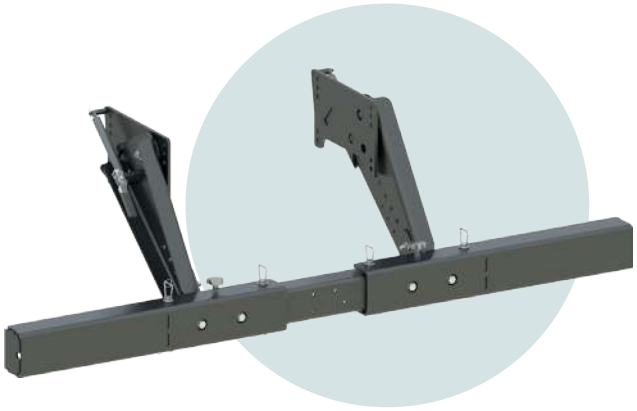



ENDS TO BE REMOVED



SUGGESTED STORAGE BETWEEN THE CHASSIS FRAMES

DESCRIPTION

- Universal device for all makes of rigids and mounted fork-lifts
- URP with removable ends to let the fork-lift wheels pass
- Fixed to the chassis with only 4 screws
- Conventional kinematics
- 1 arm length
- 2 pre-drilled plates for all manufacturers
- 30% lighter than solutions currently on the market
- 100% bolted assembly
- Assistance by gas struts protected inside the arms
- Automatic locking in up and down positions
- Cataphoresis coating
- Chassis fitting in M14 and M16
- Optional screw sets

Description	L (mm)	H (mm)	Wt. (kg)	Part number
URP with DAF and Iveco plates	2 320	594	130	**T717 05 05**
URP with MAN, Daimler Truck, Scania, Renault Trucks and Volvo Trucks plates				**T717 05 10**

Screw sets	Wt. (kg)	Part number
M14	5,5	**T520 52 24**
M16	7	**T520 52 26**

MOUNTING DIMENSIONS

1. PROFILE

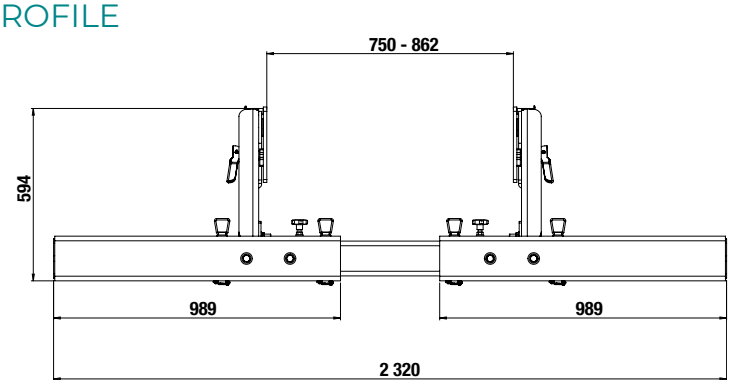

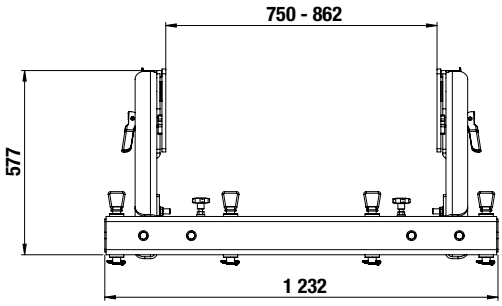

2. ARMS

Suspension	
	H Max. height
	≤ 772 mm
	≤ 822 mm

MANUAL LIFT-UP URP FOR RIGIDS

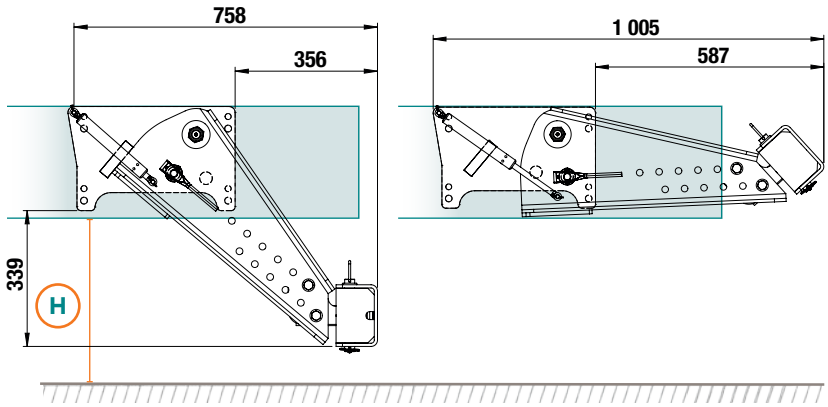

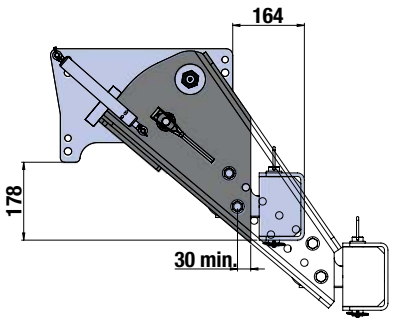

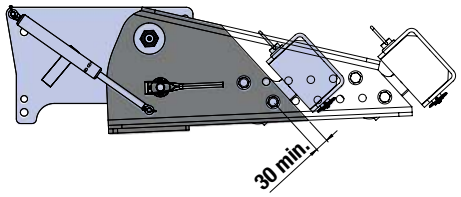

THE ARMS CAN BE SHORTENED IN 50 MM STEPS DOWN TO A MINIMUM OF 30 MM FROM THE LAST HOLE

3. PLATES

DAF
IVECO

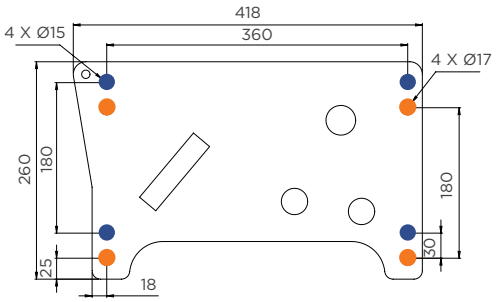

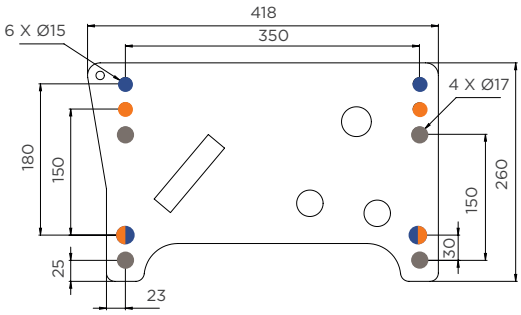

MAN
DAIMLER TRUCK
RENAULT TRUCKS
SCANIA
VOLVO TRUCKS

URP
HYDRAULIC LIFT-UP

MADE IN Traxion

APPROVED R58.03 E2 2015/208

PROFIL ACIER Traxion



STEPPED PROFILE



STRAIGHT PROFILE



UP POSITION



UP POSITION WITH COUPLING

DESCRIPTION

- Single model for tippers, aerial platforms, finishers, demountable bodies, off-road vehicles and all GWVs(1)
- 2 hexagonal profiles, straight or stepped
- Arms with adjustment positions
- 100% bolted assembly
- 100% compatible with rear coupling
- Standard version supplied with:
  - 2 hydraulic cylinders with max. pressure 180 bar
  - Counterbalance valve and flow limiter
  - 2 screws for end-of-travel adjustment
  - Provision for 2 up and down position sensors in M18
- Cataphoresis coating
- Chassis fitting in M14 or M16

(1) GWV = max. technically permissible mass

Description	Wt. (kg)	Part number
URP with stepped profile	110	**T760 05 00**
URP with straight profile	115	**T760 05 10**

Screw sets	Wt. (kg)	Part number
M14	17	**T520 52 44**
M16	4	**T520 52 46**

MOUNTING DIMENSIONS

1. PROFILE

PROFIL ACIER Traxion

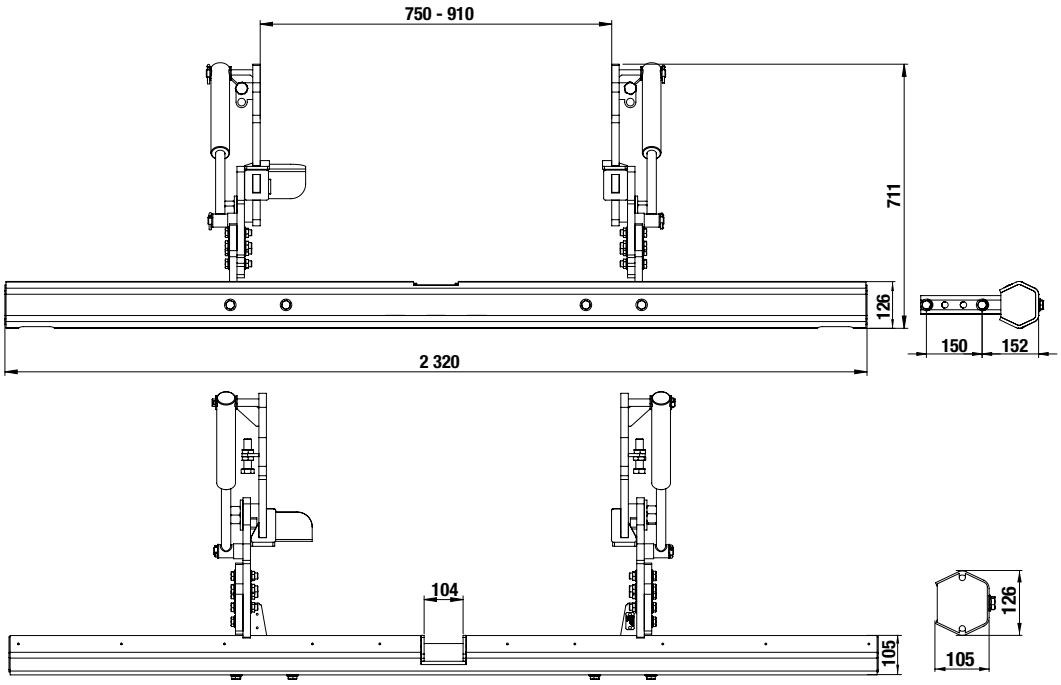

2. ARMS

Suspension	Flanges 380 mm
	H Max. height
	≤ 861 mm
	≤ 911 mm

HYDRAULIC LIFT-UP URP

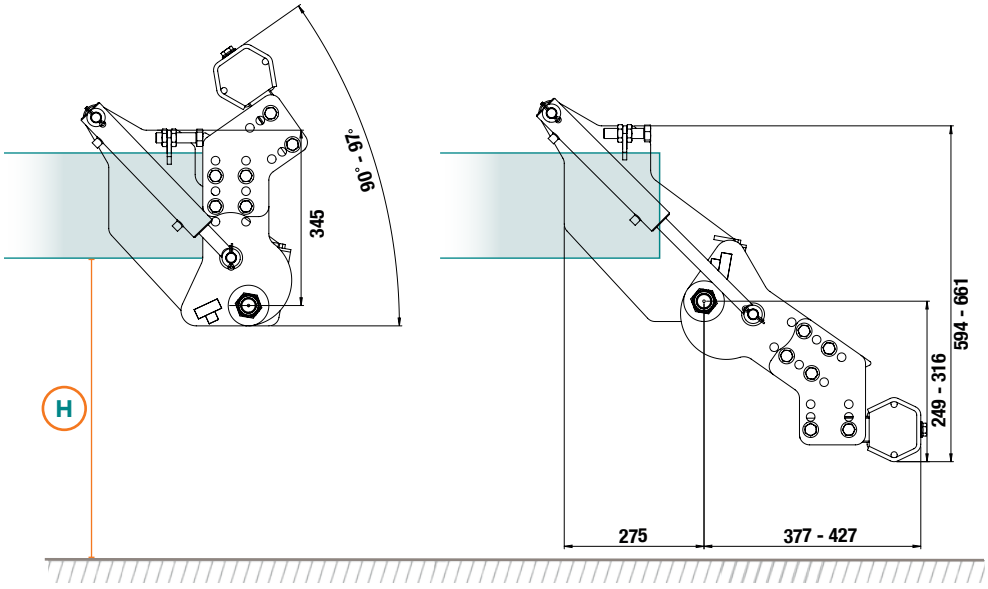

3. MOUNTINGS

MOUNTING ON TIPPERS AND AERIAL PLATFORM VEHICLES

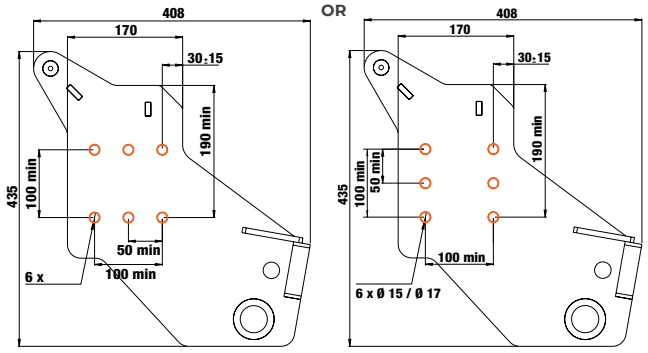

OTHER MOUNTINGS

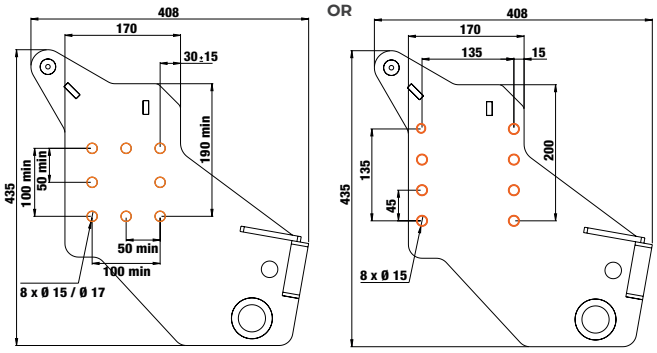

URP
HYDRAULIC
INCLINED FOR FINISHERS

MADE IN Traxion

APPROVED R58.03 UE2015/208



NEW



PROFILE WITHOUT HANDLEBAR SHAPE



UP POSITION

BUILD YOUR KIT

1 CHOICE OF TUBE



2 CHOICE OF SUB-PLATE



3 CHOICE OF ARMS



DESCRIPTION

- Tipper, aerial platform, finisher, demountable and off-road bodies
- 2 round profiles: ø121 mm and “handlebar”
- 2 arm lengths
- Arm inclination of 20, 30 or 40°
- OEM sub-plates
- 100% bolted assembly
- Can be mounted offset from the chassis
- 100% compatible with rear coupling
- Standard version supplied with:
  - 2 hydraulic cylinders with max. pressure 180 bar
  - Counterbalance valve and flow limiter
  - Provision for 2 up and down position sensors in M18
- Cataphoresis coating
- Chassis fitting in M14 or M16

	Description	Length / Travel (mm)	Wt. (kg)	Part number
1	Straight tube	2 320	31	**T7620300**
1	3-part tube	2 320	50,2	**T7620310**
2	**Sub-plates: drawings on request**			
2	Undrilled		22	**T7620200**
2	DAF		21	**T7620220**
2	IVECO		21	**T7620222**
2	RENAULT / VOLVO TRUCKS		21	**T7620224**
2	MAN		21	**T7620226**
2	DAIMLER		21	**T7620228**
2	SCANIA		21	**T7620230**
3	Arms (pair)	450	78	**T7621400**
3	Arms (pair)	510	81	**T7621420**

Screw sets	Wt. (kg)	Part number
M14	5,5	**T520 52 14**
M16	7	**T520 52 16**

MOUNTING DIMENSIONS

1. PROFILES

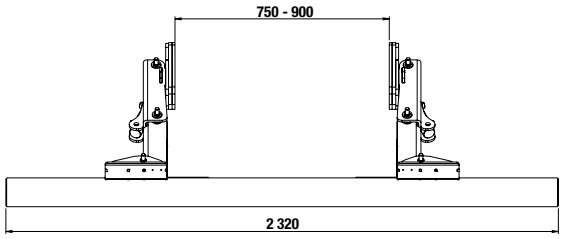

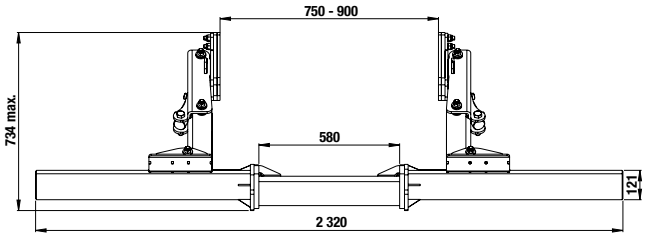

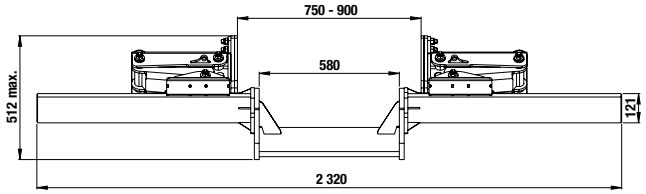

2. FLANGES

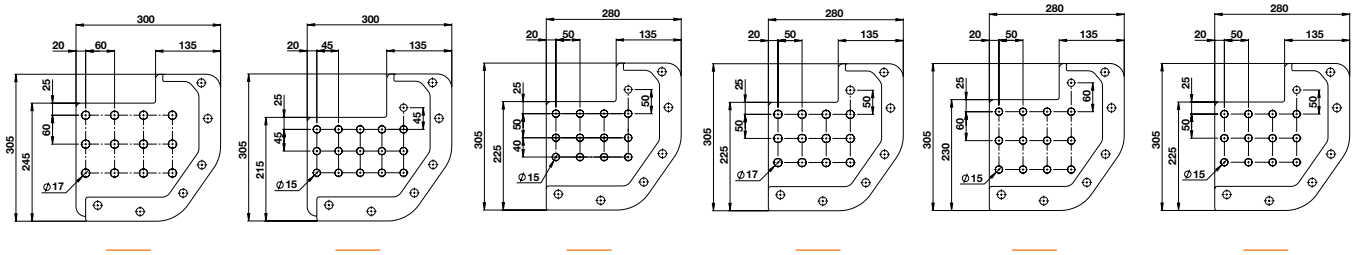

3. ARMS

450 MM TRAVEL

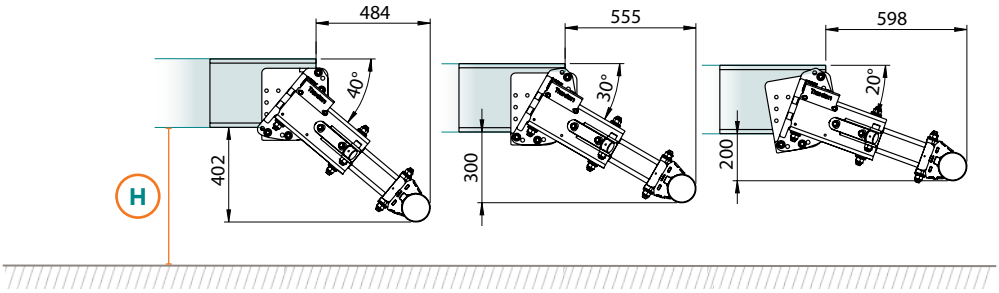

510 MM TRAVEL

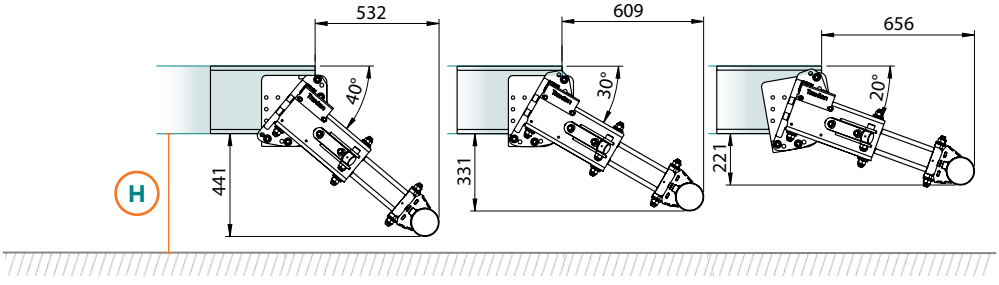

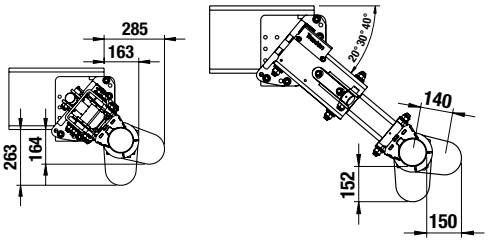

Suspension	Travel 450 mm			Travel 510 mm		
	20°	30°	40°	20°	30°	40°
	H Max. height					
	≤650	≤759	≤850	≤670	≤780	≤890
	≤700	≤800	≤900	≤720	≤830	≤ 940

URP
HYDRAULIC
HORIZONTAL



MADE IN Traxion

APPROVED **R58.03**

PROFIL ACIER Traxion

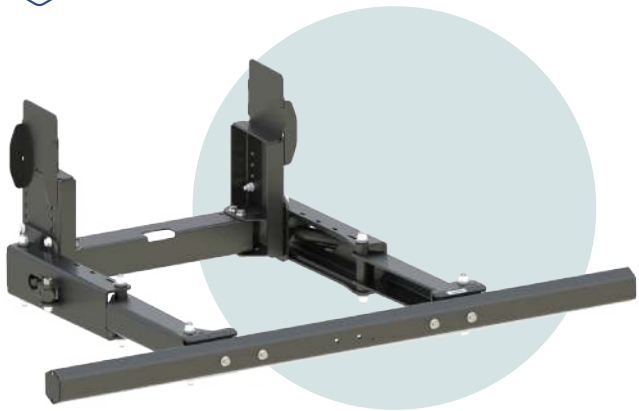



NEW

CHOICE OF PROFILE

STEEL ALUMINIUM

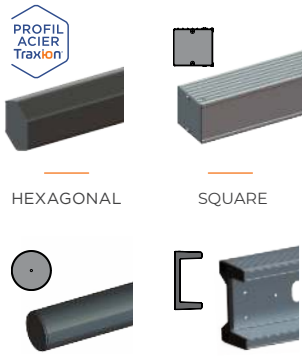

HEXAGONAL SQUARE

ROUND C-SHAPE

BUILD YOUR KIT

1 PROFILE



2 FLANGES



3 ARMS



DESCRIPTION

- For bodies with lifting arms
- 4 profiles to choose from: steel or aluminium
- 2 flange heights adjustable by trimming
- 4 arm lengths from 440 to 1,100 mm
- Simplified installation with flange without top bend • 100% bolted assembly
- 100% compatible with rear coupling
- Standard supply with:
  - 2 hydraulic cylinders with pressure max. 180 bar
  - Counterbalance valve and flow limiter
  - Provision for 2 M18 sensors
- Cataphoresis coating
- Chassis fitting in M14 or M16

	Description	Length / Travel (mm)	H (mm)	Wt. (kg)	Part number
1	Hexagonal steel profile + supports	2 320	126	64	**T764 03 00**
1	Round steel profile + supports	2 320	121	45	**T764 06 00**
1	Square aluminium profile + supports	2 400	120	44	**T764 05 00**
1	Aluminium C-shape profile + supports	2 406	250	44	**T764 04 00**
2	Flanges (pair)		655	50	**T764 05 20**
2	Flanges (pair)		710	59	**T764 05 80**
3	Arms (pair)	440		64	**T764 14 00**
3	Arms (pair)	500		66	**T764 14 20**
3	Arms (pair)	900		86	**T764 14 40**
3	Arms (pair)	1 100		100	**T764 14 60**

Screw sets	Wt. (kg)	Part number
M14	5,5	**T520 52 14**
M16	7	**T520 52 16**

MOUNTING DIMENSIONS

1. PROFILES

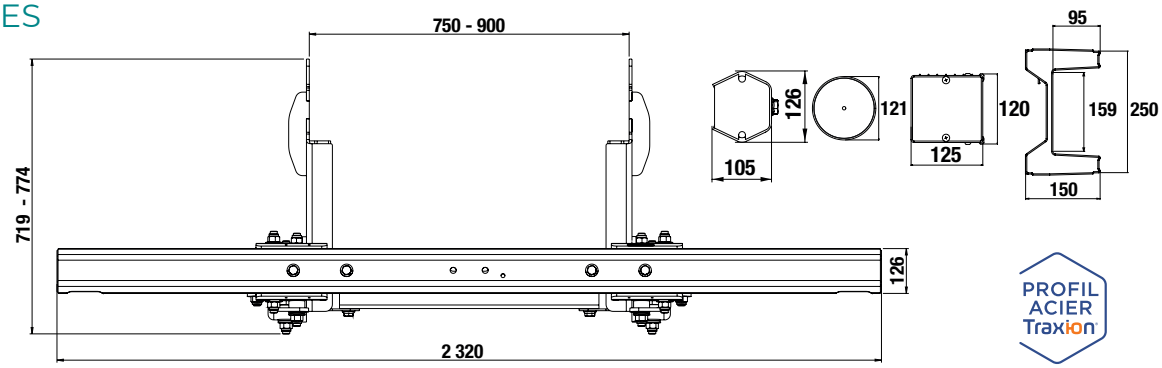

2. ARMS

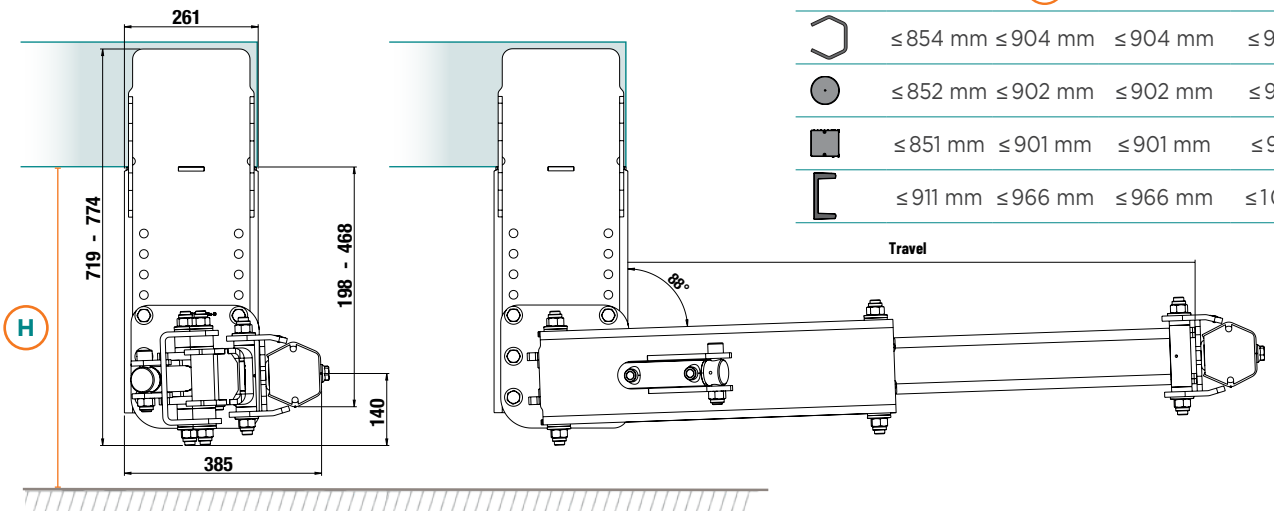

Flanges	Suspension 655	Suspension 710	Suspension 655	Suspension 710
	H Max. height			
	≤ 854 mm	≤ 904 mm	≤ 904 mm	≤ 954 mm
	≤ 852 mm	≤ 902 mm	≤ 902 mm	≤ 952 mm
	≤ 851 mm	≤ 901 mm	≤ 901 mm	≤ 951 mm
	≤ 911 mm	≤ 966 mm	≤ 966 mm	≤ 1016 mm

3. MOUNTINGS

HEXAGONAL STEEL (PROFIL ACIER Traxion)

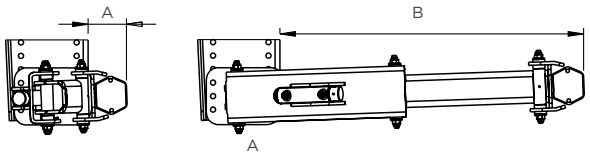

ROUND STEEL

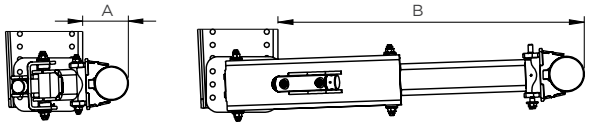

ALUMINIUM SQUARE

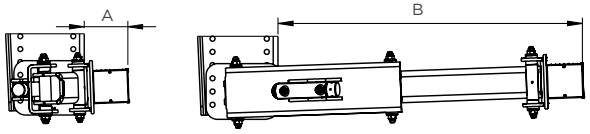

ALUMINIUM C-SHAPE

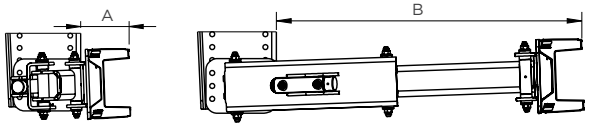

Profiles	A (mm)	B (mm) - Travel 440	500	900	1 100
	128	561	626	1025	1225
	153	593	658	1057	1257
	143	583	648	1047	1247
	152	592	657	1056	1256

URP

FIXED ALUMINIUM C-SHAPE

SEMI-TRAILER



APPROVED **R58.03**

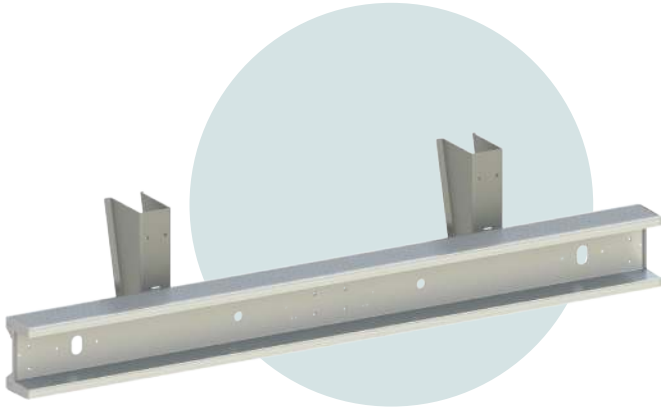

DESCRIPTION

- Semi-trailer URP
- For new vehicles or after-sales
- Anodised aluminium profiles
- Raw steel legs to be welded under the chassis frames
- Raw-finish flanges to be painted by the bodybuilder
- Supplied with mounting cleats, finishing caps and screws

Description	L (mm)	H (mm)	Wt. (kg)	Part number
Machined aluminium C-shape profile + connectors	2 406	250	24	**T795 03 00**
Unmachined aluminium C-shape profile + connectors				**T795 03 05**
Fixing chassis bracket (pair)		520	22	**T795 05 20**

MOUNTING DIMENSIONS

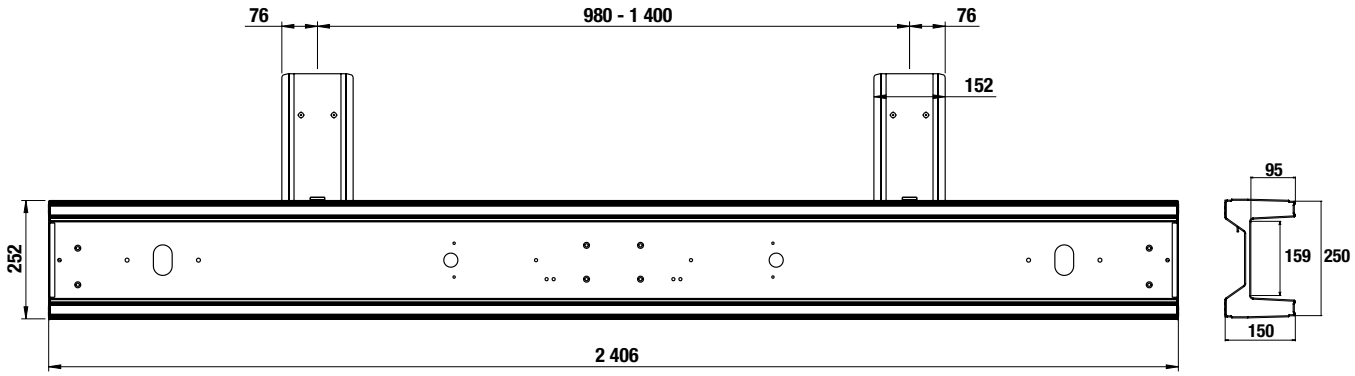

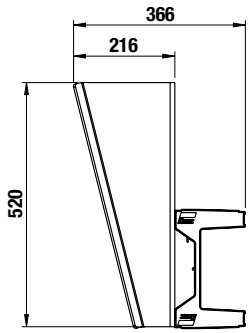

URP
TELESCOPIC MOUNTED FORK-LIFT
SEMI-TRAILER

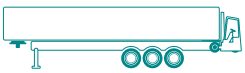

MADE IN Traxion

APPROVED **R58.03**

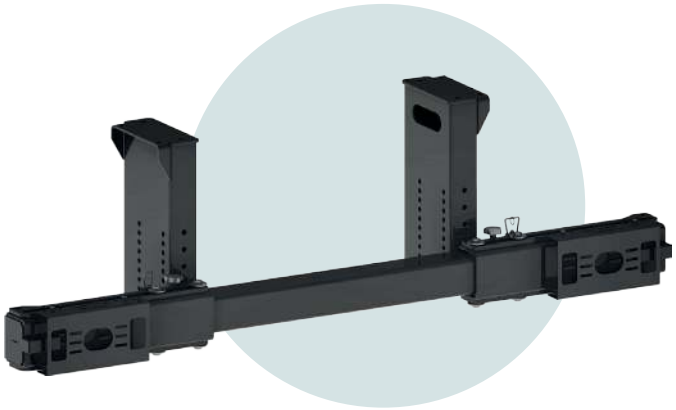

URP WITH C-SHAPE LIGHT SUPPORTS



C-SHAPE LIGHT SUPPORTS OPTION

DESCRIPTION

- Universal device for semi-trailers and mounted fork-lifts
- URP slides at the ends to let the fork-lift wheels pass
- Light cable protection
- Fixed under the chassis frames with 4 screws
- 1 arm length
- 100% bolted assembly
- Locking pins supplied
- Anti-vibration screws for noise reduction
- Cataphoresis coating
- Chassis fitting in M16
- Optional screw set and light mounting supports

Description	L (mm)	H (mm)	Wt. (kg)	Part number
Telescopic mounted fork-lift URP for semi-trailers	2 320	641	150	**T752 05 00**
C-shape light supports			4,5	**T752 05 30**

Screw set	Wt. (kg)	Part number
M16	5,5	**T520 52 26**

MOUNTING DIMENSIONS

1. PROFILE

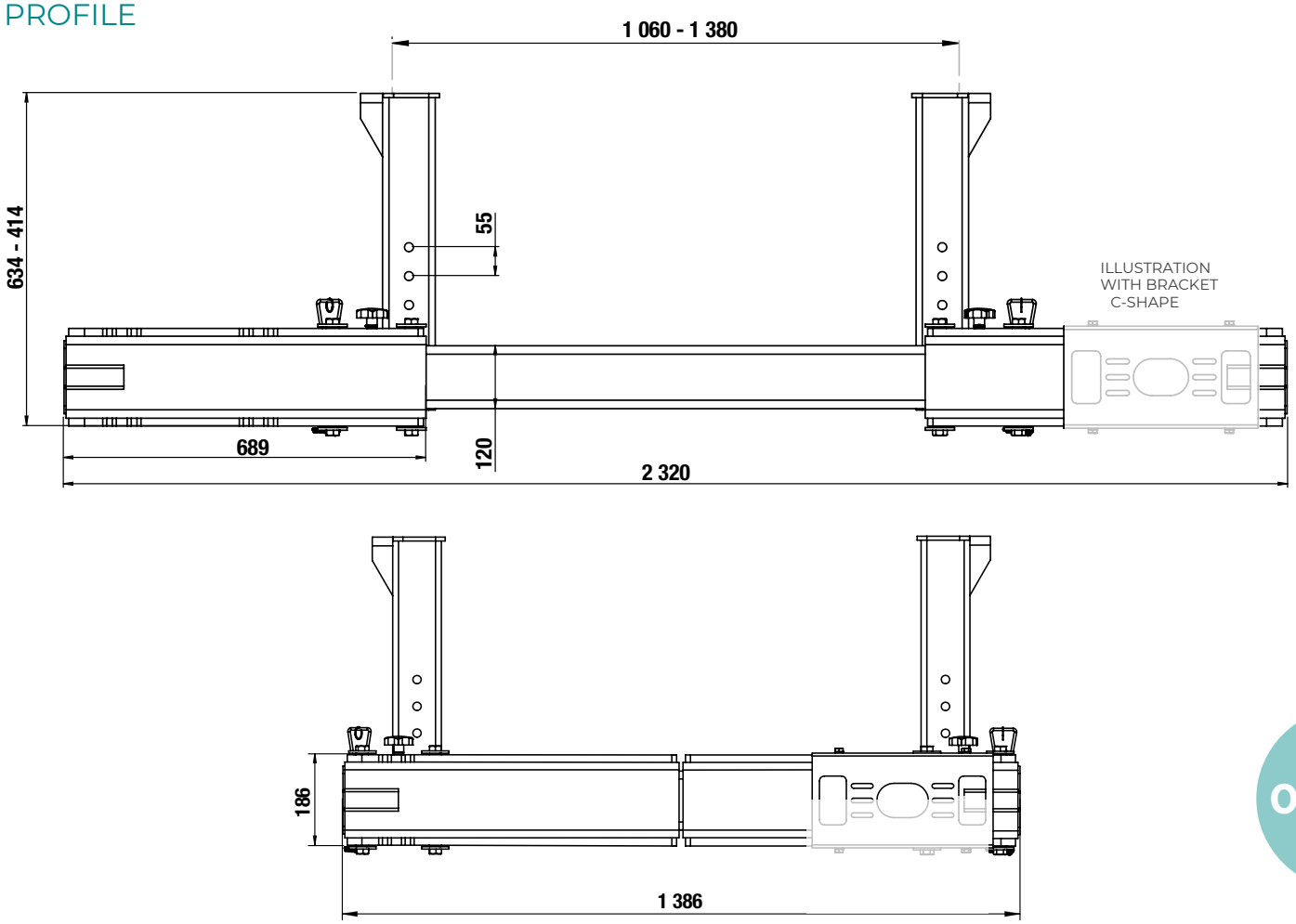

2. FLANGE

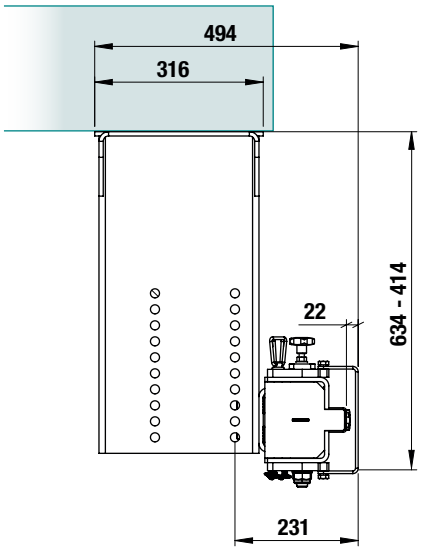

05

DRAWBAR EYES

WELD-ON BNA DRAWBAR EYE	136
BOLT-ON BNA DRAWBAR EYE	137
DIN50 DRAWBAR EYE	138
DIN40 DRAWBAR EYE	139
ACCESSORIES PLATES, SLEEVES, SCREWS	140

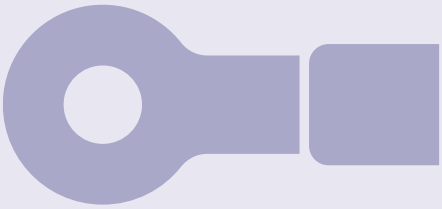

DRAWBAR EYE
WELD-ON BNA

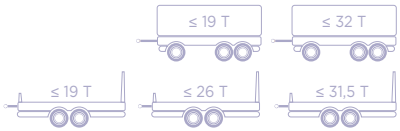

APPROVED R55

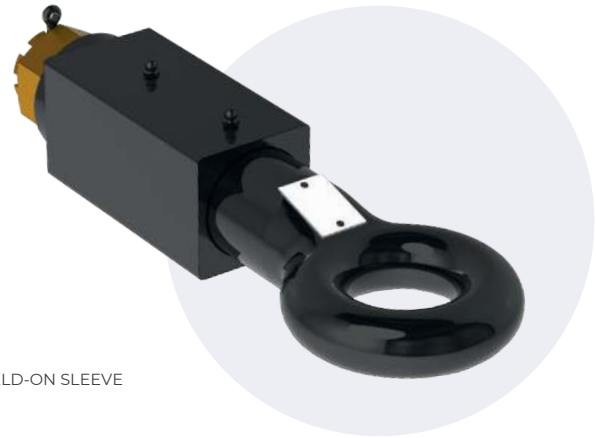

WELD-ON SLEEVE



FOR COUPLINGS BNA

DESCRIPTION

- A complete approved weld-on range
- Drawbar eyes designed for road and construction sites
- The highest capacities on the market
- Cataphoresis protection
- Accessories: single or multi-height weld-on plates, DIN to BNA adapter

MOUNTING DIMENSIONS

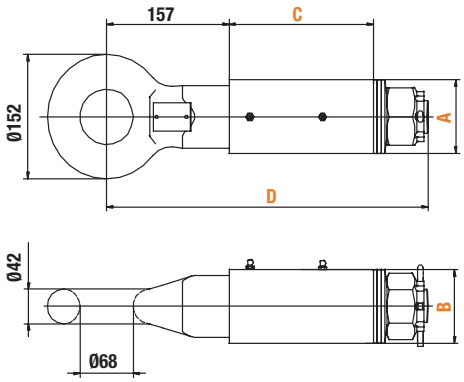

Model	A (mm)	B (mm)	C (mm)	D (mm)
T468 30 05	80	80	173	400
T468 30 10	90	90	185	412
T468 30 20	100	100		
T468 30 30	100	100		

Part number	T468 30 00(1)	T468 30 05(2)	T468 30 10
A □ B (mm)		80 x 80	90 x 90
D (kN)	200	160	200
Dc (kN)	120	✓	120
V (kN)	60	✗	60
S (kg)	1 000		1000
Weight (kg)	13,8	19	21

Part number	T468 30 20	T468 30 30
A □ B (mm)	100 x 100	100 x 110
D (kN)	200	
Dc (kN)	140	160
V (kN)	90	140
S (kg)	1000	
Weight (kg)	23,5	25

(1) Supplied without sleeve - after-sales for T468 30 10 (2) Turntable drawbar trailer limited to 19 t

DRAWBAR EYE
BOLT-ON BNA



APPROVED R55



100 %
ORLANDI ORIGIN
WARRANTY



FOR COUPLINGS
BNA

DESCRIPTION

- Drawbar eye for road and site use
- The highest capacities on the market
- Cataphoresis protection
- Supplied with screw set
- Accessories: single or multi-height weld-on plates, DIN to BNA adapter

Part number	T468 50 35
A □ B (mm)	160
D (kN)	200
Dc (kN)	140
V (kN)	90
S (kg)	1 000
Weight (kg)	21,5

MOUNTING DIMENSIONS

100 %
ORLANDI ORIGIN
WARRANTY

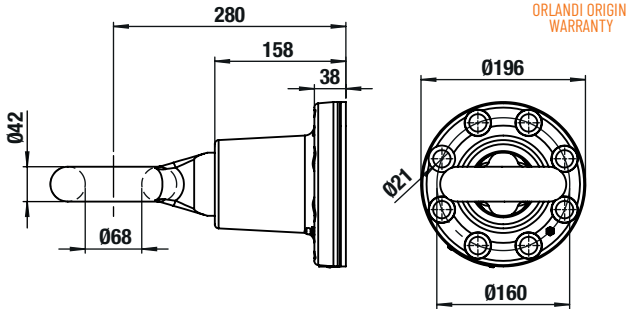

T468 50 35
(SCREWS INCLUDED)

05

DRAWBAR EYE
DIN50



APPROVED R55



BOLT-ON



WELD-ON



FOR FITTING ON SLEEVE



FOR COUPLINGS DIN50

DESCRIPTION

- Models with bolt-on plate, weld-on plate or for fitting on a weld-on sleeve
- Drawbar eyes designed for road and construction sites
- The highest capacities on the market
- Cataphoresis protection
- Accessories: single or multi-height weld-on plates, DIN to BNA adapter

MOUNTING DIMENSIONS

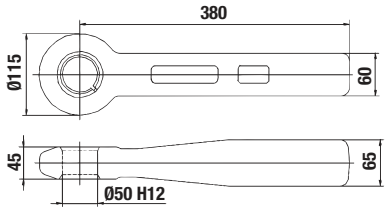

T450 20 10

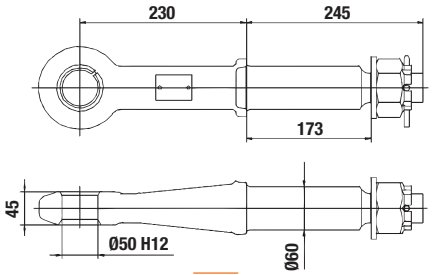

T450 30 10

Part number	T450 20 10	T450 30 10[1]
D (kN)	190	250
Dc (kN)	✓	
V (kN)	✗	
S (kg)		
Weight (kg)	11	12,5

Part number	T450 50 15	T450 50 25
D (kN)	200	
Dc (kN)	140	135
V (kN)	75 50	90 64,8
S (kg)	1000 2500	
Weight (kg)	11,2	17

(1) Sleeve T153 10 41 to be ordered separately

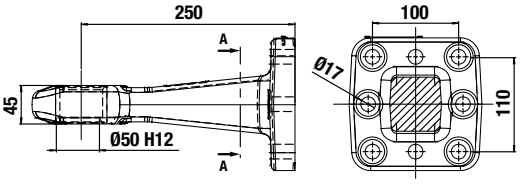

T450 50 15 - SCREWS INCLUDED

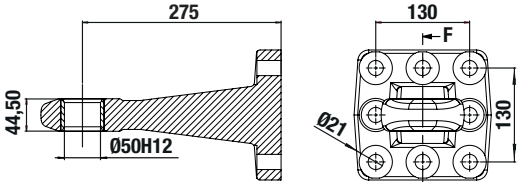

T450 50 25

DRAWBAR EYE
DIN40





BOLT-ON

APPROVED R55



WELD-ON



FOR FITTING ON SLEEVE



FOR COUPLINGS DIN40

DESCRIPTION

- A complete approved range
- Models with bolt-on plate, weld-on plate or for fitting on a weld-on sleeve
- Capacities suited to all trailers

- Accessories: screw sets, weld-on plates for drawbar mounting, weld-on sleeves, wear bushes

Part number	T440 20 10	T440 20 20
D (kN)	125	
Dc (kN)	66	60
V (kN)	20	
S (kg)	900	1000
C (mm)	56	60
Weight (kg)	7,5	8

Part number	T440 30 10(1)	T440 50 15
D (kN)	125	
Dc (kN)	74	100
V (kN)	23	40
S (kg)	1000	
Weight (kg)	10,7	10

(1) Sleeve T153 10 41 to be ordered separately

MOUNTING DIMENSIONS

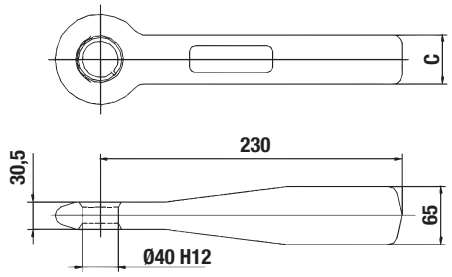

T440 20 10 - T440 20 20

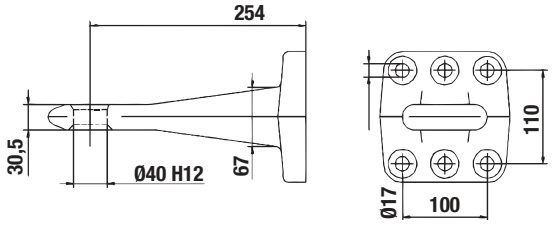

T440 50 15 - SCREWS INCLUDED

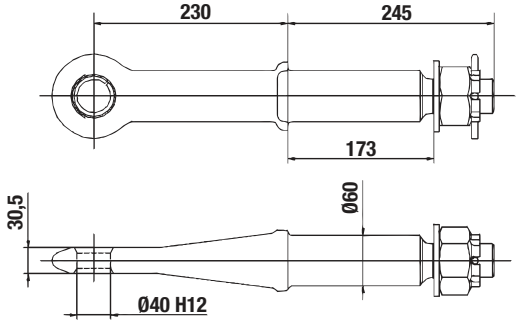

T440 30 10

05

ACCESSORIES
PLATES, SLEEVES, SCREWS

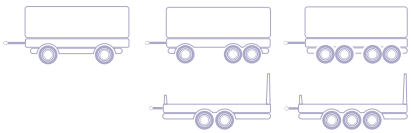

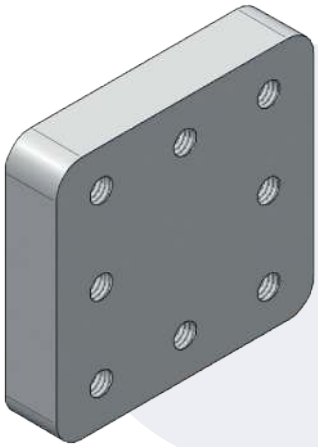



WELD-ON SLEEVE

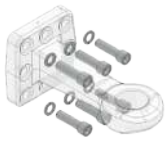

SCREWS



WEAR BUSHES

MOUNTING DIMENSIONS

STANDARD WELD-ON PLATES

Model	A (mm)	B (mm)	C (mm)	D (mm)	E (mm)	F (mm)	G (mm)
T520 01 00	162		100	110		M16	30
T520 02 00	200						
T520 05 00	190	200	130			M20	40

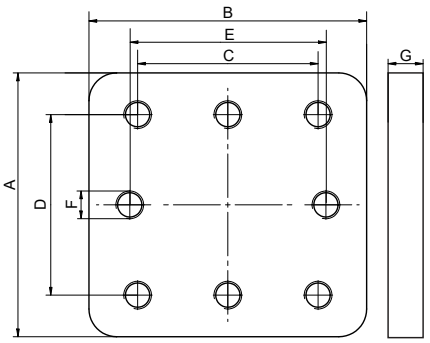

SPECIFIC PLATES

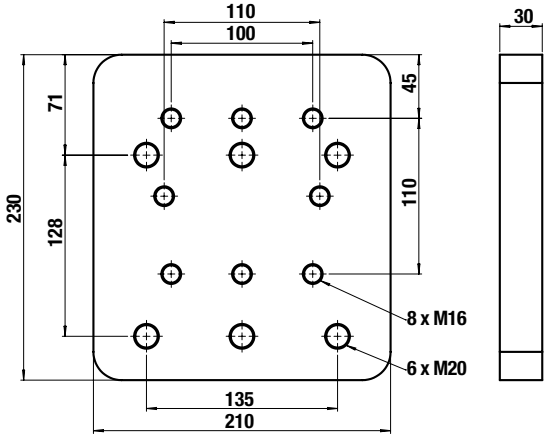

T520 04 00
WELD-ON PLATE
FOR DRAWBAR EYE T290 11 00

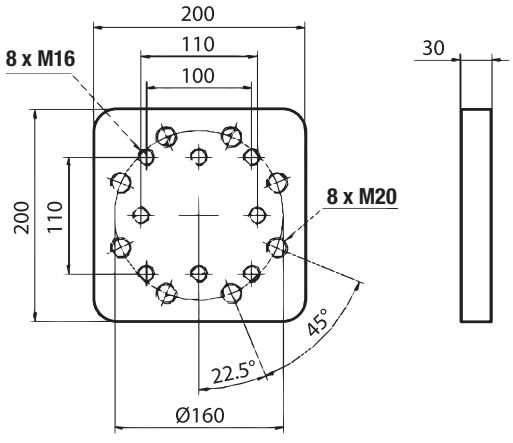

T520 07 00
WELD-ON PLATE
FOR DRAWBAR EYES T468 50 35 & DIN50

SPECIFIC PLATES (CONTINUED)

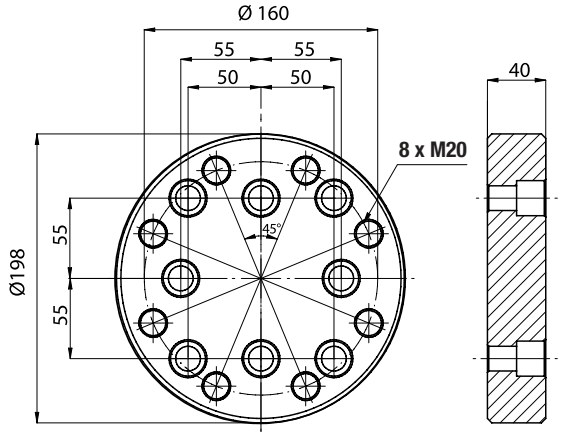

T520 07 01
BOLT-ON ADAPTER
DIN50 / BNA
(SCREWS INCLUDED)

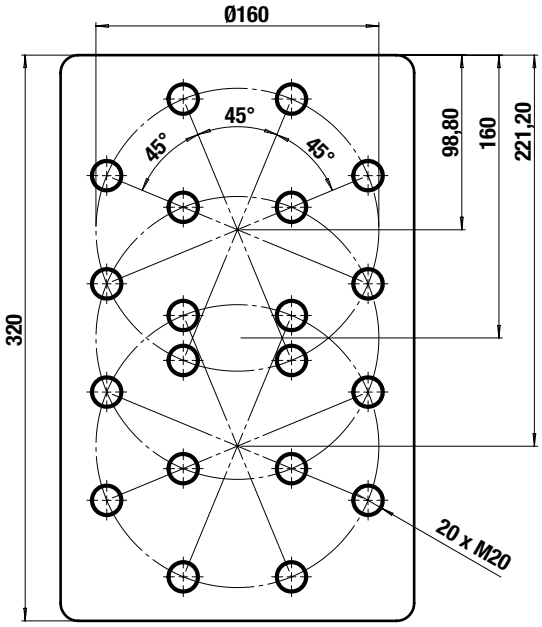

T520 07 10
MULTI-HEIGHT WELD-ON PLATE
FOR DRAWBAR EYE T468 50 35 TH. 30 MM

WELD-ON SLEEVES

Part number	A (mm)	B (mm)	C (mm)	D (mm)	For drawbar eyes
T153 10 41	173	90 x 90	60		T450 30 10 - T440 30 10



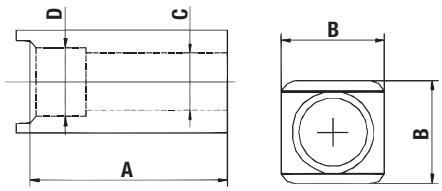

WEAR BUSHES

Part number	Ø	For drawbar eyes
T153 00 17	40	T440 30 10
T153 00 04	50	T450 30 10



AFTER-SALES SPLIT BUSHES

T153 00 24	40	T440 50 15
T153 00 16	50	T450 50 15 / T450 50 25
T153 00 14	50	T450 30 10 / T450 20 10



AFTER-SALES SOLID BUSHES

SCREWS

Part number	For drawbar eyes	Description
T153 00 25	T440 50 15	6 x M16 GEOMET + washers
T153 00 35	T450 50 15	
T153 00 46	T450 50 25	8 x M20 GEOMET + washers
T153 00 58	T468 50 35	8 x M16 x50 GEOMET + washers

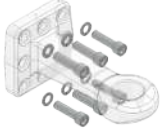

06

FIFTH WHEELS

FIFTH WHEEL KINGPIN	144
2” FIFTH WHEEL STEEL PLATE	145
2” FIFTH WHEEL CAST IRON PLATE	146
2”/ 3.5” FIFTH WHEEL HD CAST IRON PLATE	148
2”/ 3.5” FIFTH WHEEL DOUBLE OSCILLATION	150
2” FIFTH WHEEL PNEUMATIC LIFT-UP DUAL HEIGHT	152
2” FIFTH WHEEL STANDARD SLIDER	154
2” FIFTH WHEEL SLIDER FOR EXCEPTIONAL LOADS	156



FIFTH WHEEL
KINGPIN



APPROVED R55





FOR 2“ FIFTH WHEELS

DESCRIPTION

- Range of approved 2” kingpins
- 6 cup thicknesses for welded mounting on the semi-trailer coupling plate
- Supplied with screws
- Ext. Ø 240 mm – cup Ø 280 mm
- Bolted kingpin for easier maintenance or replacement

Part number	T3800060	T3800080	T3800100
Height (mm)	6	8	10
D (kN)		163	
Class		H50-X	

Part number	T3800120	T3800160
Height (mm)	12	16
D (kN)	163	
Class	H50-X	

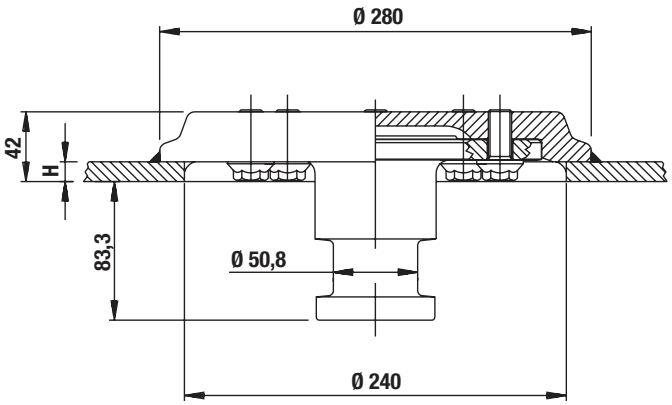

2” FIFTH WHEEL
STEEL PLATE



APPROVED R55

DESCRIPTION

- Economical model with pressed sheet steel plate
- 3 heights for all coupling configurations for tractors and semi-trailers
- Numerous accessible grease nipples for easier maintenance

Part number	T3122150	T3122185	T3122218
Type	RS 08		
Height (mm)	150	185	218
D (kN)	152		
Vertical load U (T)	20		
Weight (kg)	128	130	135
Class	G50-X		

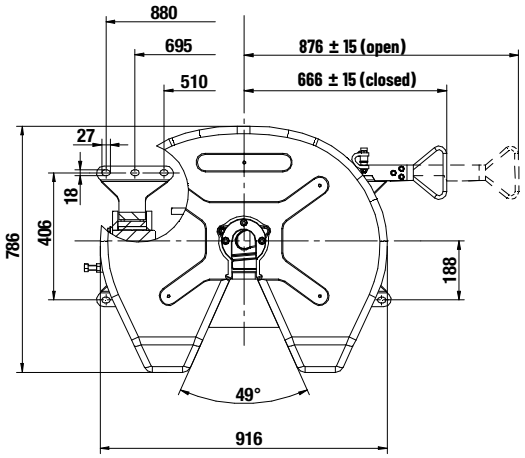

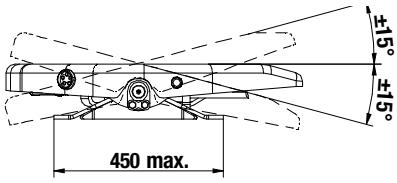

SPARE PARTS

	Description	Part number
10		T154 00 92
11		T154 00 93
15		T154 00 79
21	After-sales kit	T154 00 50
22		T154 00 83
2 6 7		T154 01 01

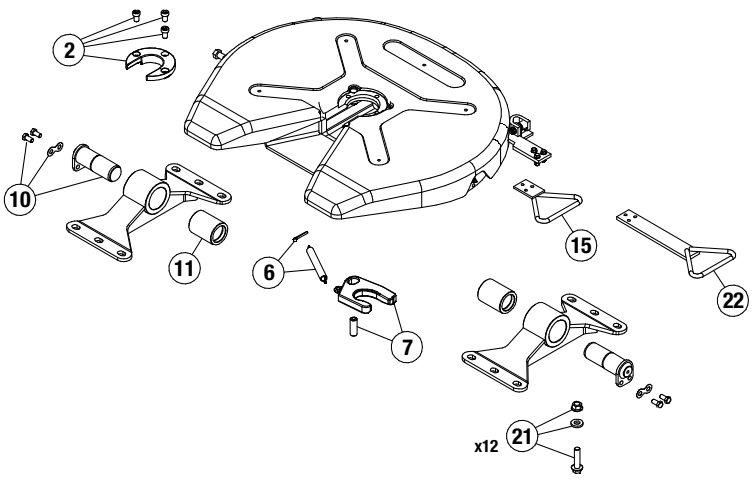

2” FIFTH WHEEL
CAST IRON PLATE

APPROVED R55



DESCRIPTION

- Model with cast iron plate
- 3 heights for all coupling configurations for tractors and semi-trailers
- Articulation on rubber pads
- Numerous accessible grease nipples for easier maintenance
- Very low maintenance

Part number	T3200150	T3200185	T3200250
Type	RV10		
Height (mm)	150	185	250
D (kN)	152		
Vertical load U (T)	22		
Weight (kg)	147	151	164
Class	G50-X		

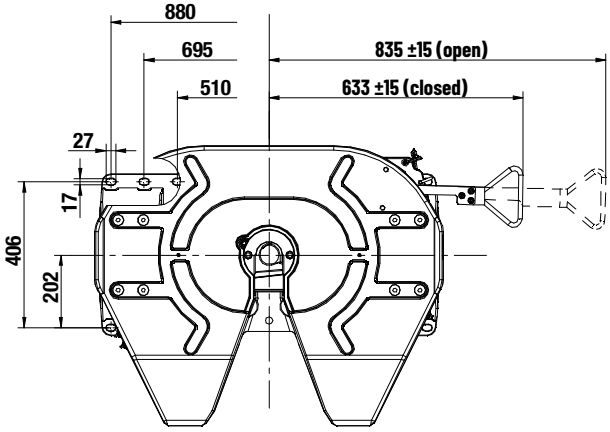

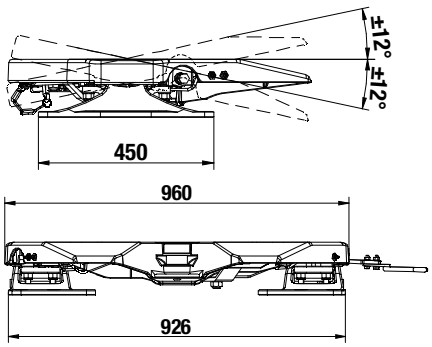

SPARE PARTS

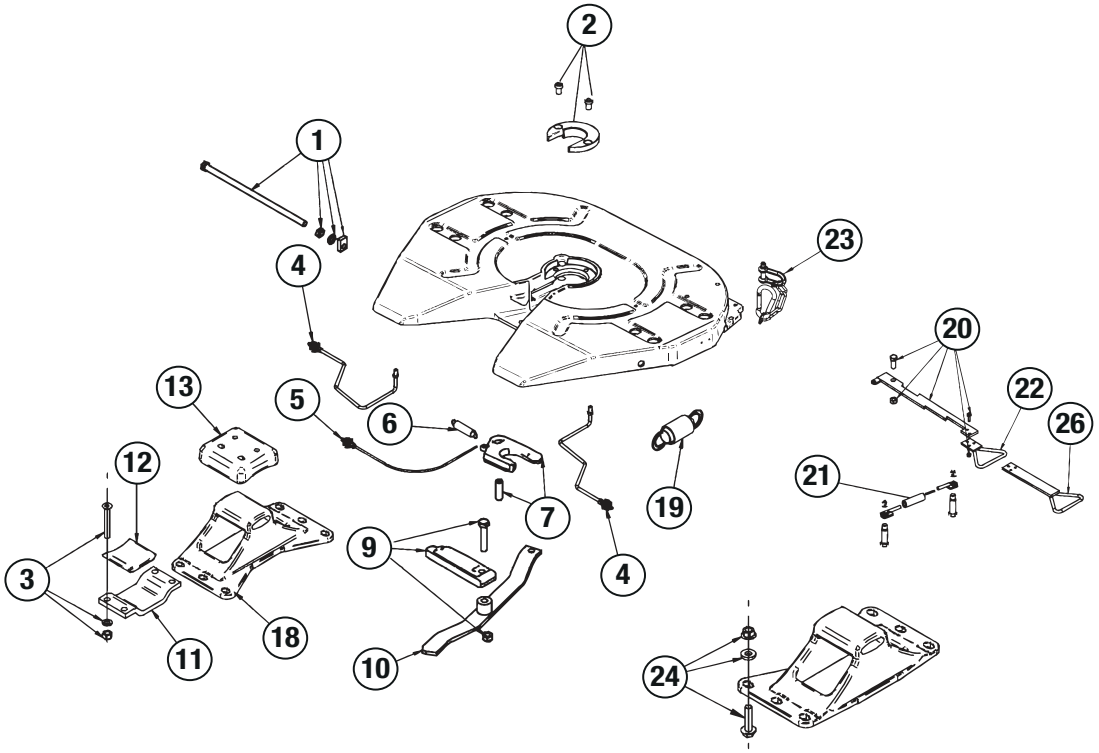

		Description T320 01 50 T320 01 85 T320 02 50
1		T154 02 71
2		T154 00 55
2 6 7	After-sales kit	T154 02 77
3		T154 00 19
3 12 13	After-sales kit	T154 00 31
4		T154 02 72
5		T154 02 73
6		T154 00 58
7		T154 00 89
9		T154 00 90
10		T154 02 74

		Description T320 01 50 T320 01 85 T320 02 50		
11		T154 00 07		
12		T154 00 06		
13		T154 00 05		
18		T154 00 72	T154 00 73	T154 02 75
19		T154 00 37		
20		T154 02 76		
21		T154 00 48		
22		T154 00 79		
23		T154 02 78		
24	After-sales kit	T154 00 50		

2”/ 3.5” FIFTH WHEEL
HD CAST IRON PLATE

APPROVED R55



DESCRIPTION

- Model with cast iron plate
- Very high-capacity fifth wheel available in 2” / 3.5”
- 2” conversion kit ⟷ 3,5”
- Articulation on rubber pads
- Numerous accessible grease nipples for easier maintenance
- Very low maintenance

Part number	T3220190	T3220250	T3250190	T3250250
Type	RP90T			
Kingpin Ø	2”		3,5”	
Height (mm)	190	250	190	250
A (mm)	12°	15°	12°	15°
B (mm)	15°			
D (mm)	170		260	
Vertical load U (T)	24		40	
Weight (kg)	200	215	200	215

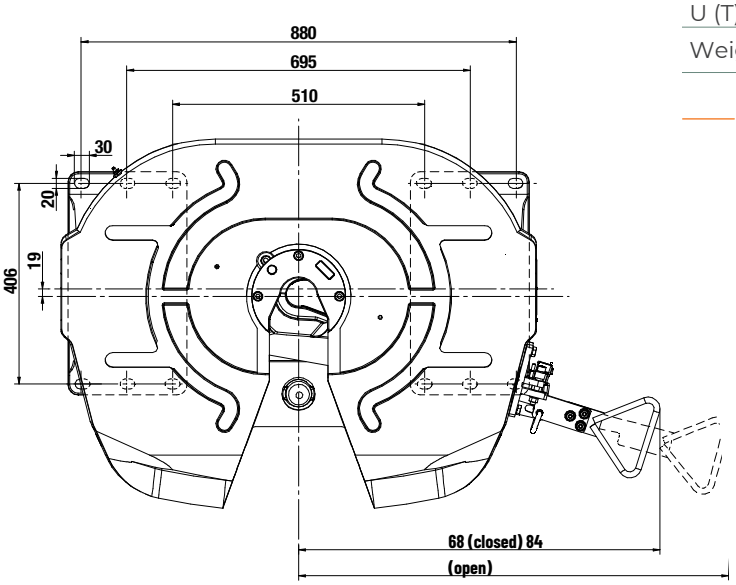

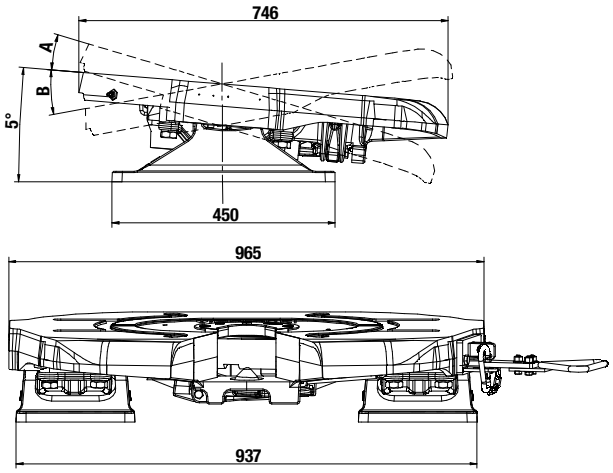

SPARE PARTS

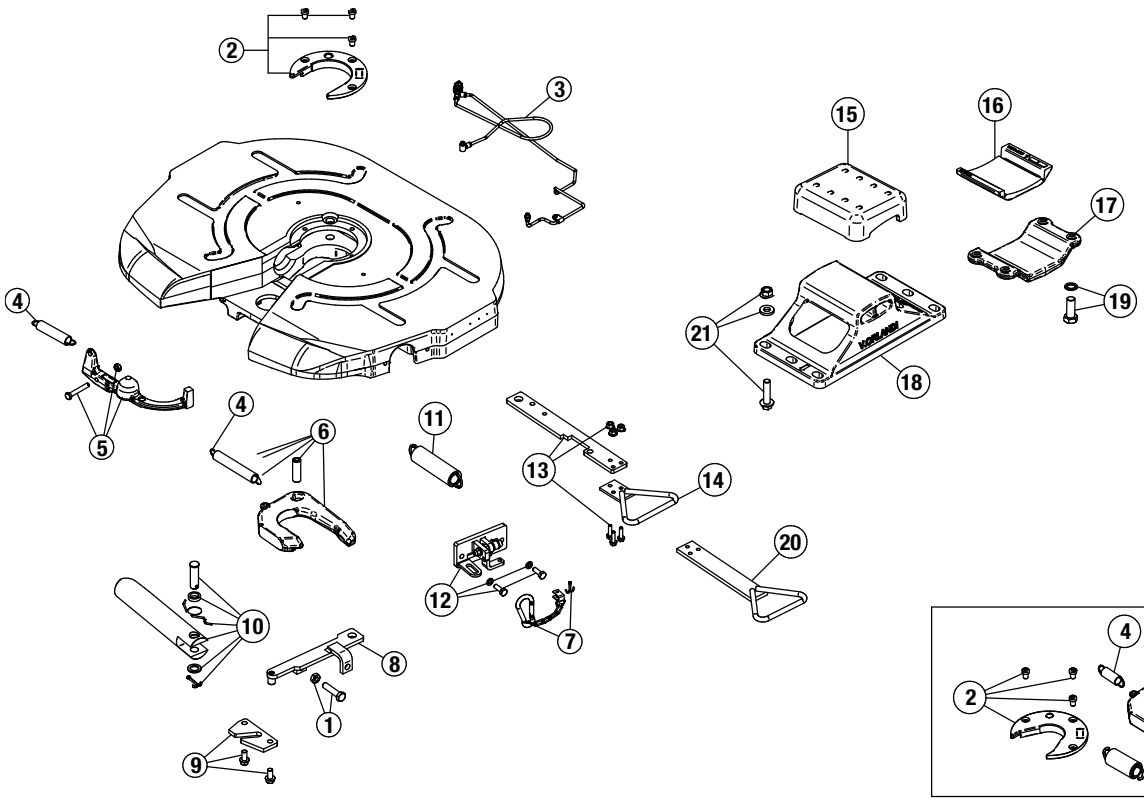

		T322 0190	T322 0250	T325 0190	T325 0250
1		T154 0143			
2		T154 01 64		T154 01 26	
2 4 6	After-sales kit	T154 01 68		T154 01 62	
4		T154 01 29			
5		T154 01 31			
6		T154 02 90		T154 01 47	
7		T154 02 27			
8		T154 01 41			
9		T154 01 42			
10		T154 01 38			
11		T154 01 40			
12		T154 01 35			
13		T154 01 49			
14	After-sales kit	T154 00 79			
15		T154 01 54			
15 16 19 x2	After-sales kit	T154 0161			
16		T154 01 55			
17		T154 01 56			
18		T154 01 52	T154 01 53	T154 01 52	T154 01 53
19		T154 01 57			
20		T154 00 83			

Conversion kits	Part number
From 2" to 3.5"	T154 0159
From 3.5" to 2"	T154 0166

2”/ 3.5” FIFTH WHEEL
DOUBLE OSCILLATION

APPROVED R55



DESCRIPTION

- Double-articulated device with cast iron plate
- Compact with an overall height of 290 mm
- Very high-capacity fifth wheel available in 2” or 3.5”
- Allows a vertical load (U) of up to 40 T on the kingpin
- 2” conversion kit ⟷ 3,5”
- Lateral tilt of 12° max. with manual locking (off-road use only)
- Numerous accessible grease nipples for easier maintenance
- Very low maintenance

Part number	T305 50 20	T305 50 35
Type	RP90-DO	
Kingpin Ø	2”	3,5”
Height (mm)	290	
D (kN)	170	260
Vertical load U (T)	24	40
Weight (kg)	306	
Class	S	G50-X

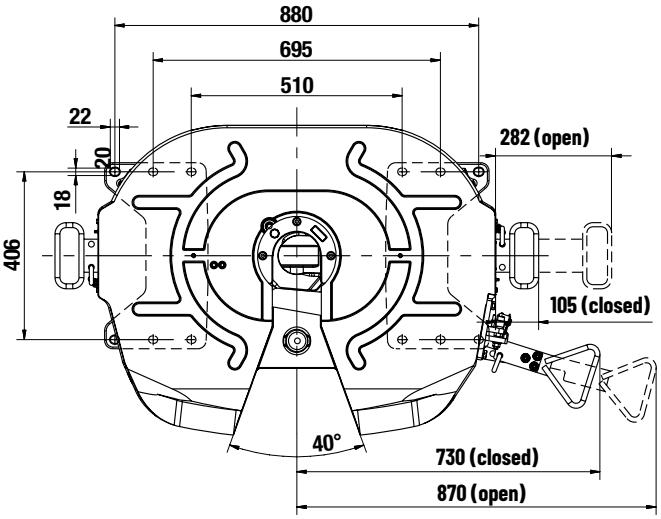

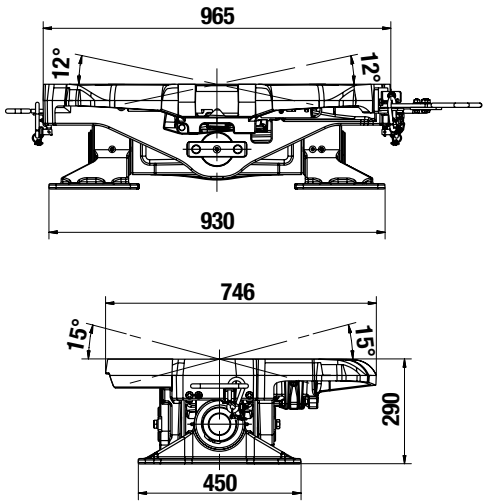

SPARE PARTS

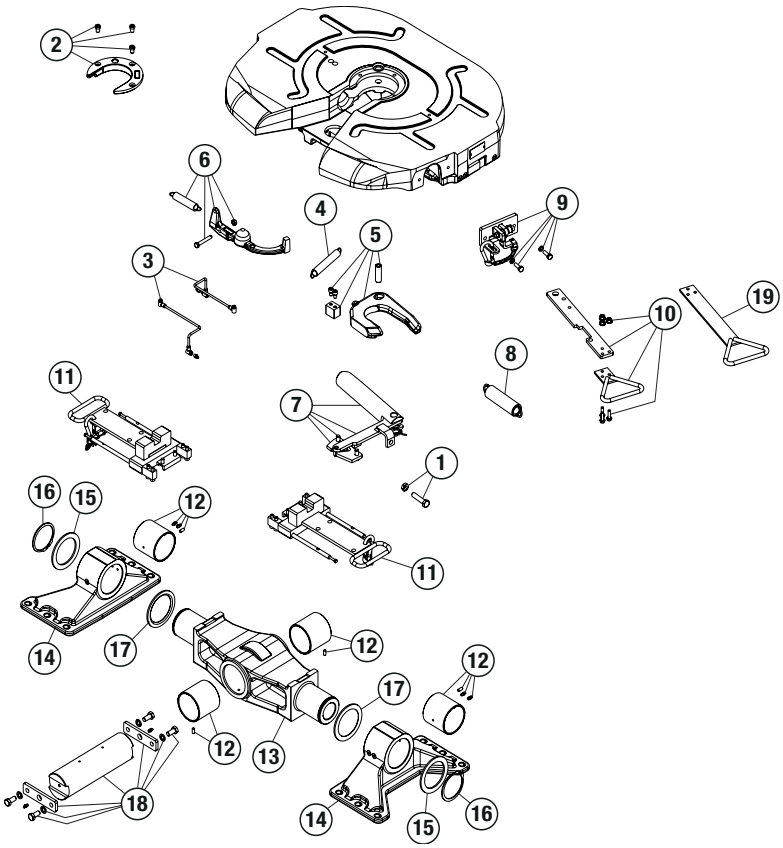

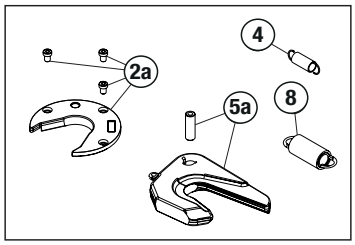

Conversion kits	
From 3.5” to 2”	T154 01 66

		Part number
1		T154 01 43
2 (3,5”)		T154 01 26
2a (2”)		T154 01 64
2a 5a 4 8		T154 01 66
2a 5a 3 5 8	Kit 2”	T154 01 67
2a 5a		T154 01 68
2 4 5 8		T154 01 59
2 3 4 5 8	Kit 3.5”	T154 01 60
02 May		T154 01 62
3		T154 02 83
4		T154 01 29
5 (3,5”)		T154 02 89
5a (2”)		T154 02 90
6		T154 02 84
7		T154 02 85
8		T154 01 40
9		T154 02 86
10		T154 02 87
11		T154 00 88
12		T154 02 38
13		T154 02 44
14		T154 02 39
15		T154 02 41
16		T154 02 40
17		T154 02 42
18		T154 02 43
19		T154 00 83
-	Screw set	T154 00 50

2” FIFTH WHEEL
PNEUMATIC LIFT-UP
DUAL HEIGHT

APPROVED R55



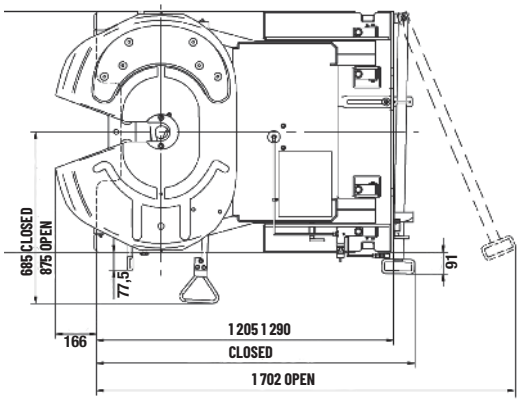

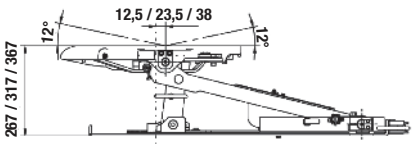

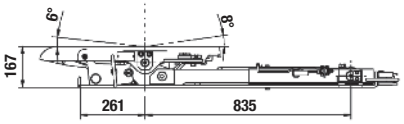

DESCRIPTION

- Dual-height device allowing a lift of 100, 150 or 200 mm
- Pneumatic lifting assembly with integrated air bag
- Anti-pinch safety device, simple and risk-free handling
- Powerful rack locking mechanism

- Supplied with connecting plate pre-drilled to the rigid’s hole pattern
- The highest towing values on the market

Part number	T330 00 01 Greased	T330 00 02 Greased	T330 00 03 Greased
Type	FDH		
Lift (mm)	100	150	200
D (kN)	120		
Vertical load U (T)	18		
Weight (kg)	341	344	346
Dim. (mm)	1 205 x 1 000		
Class	S		

SPARE PARTS

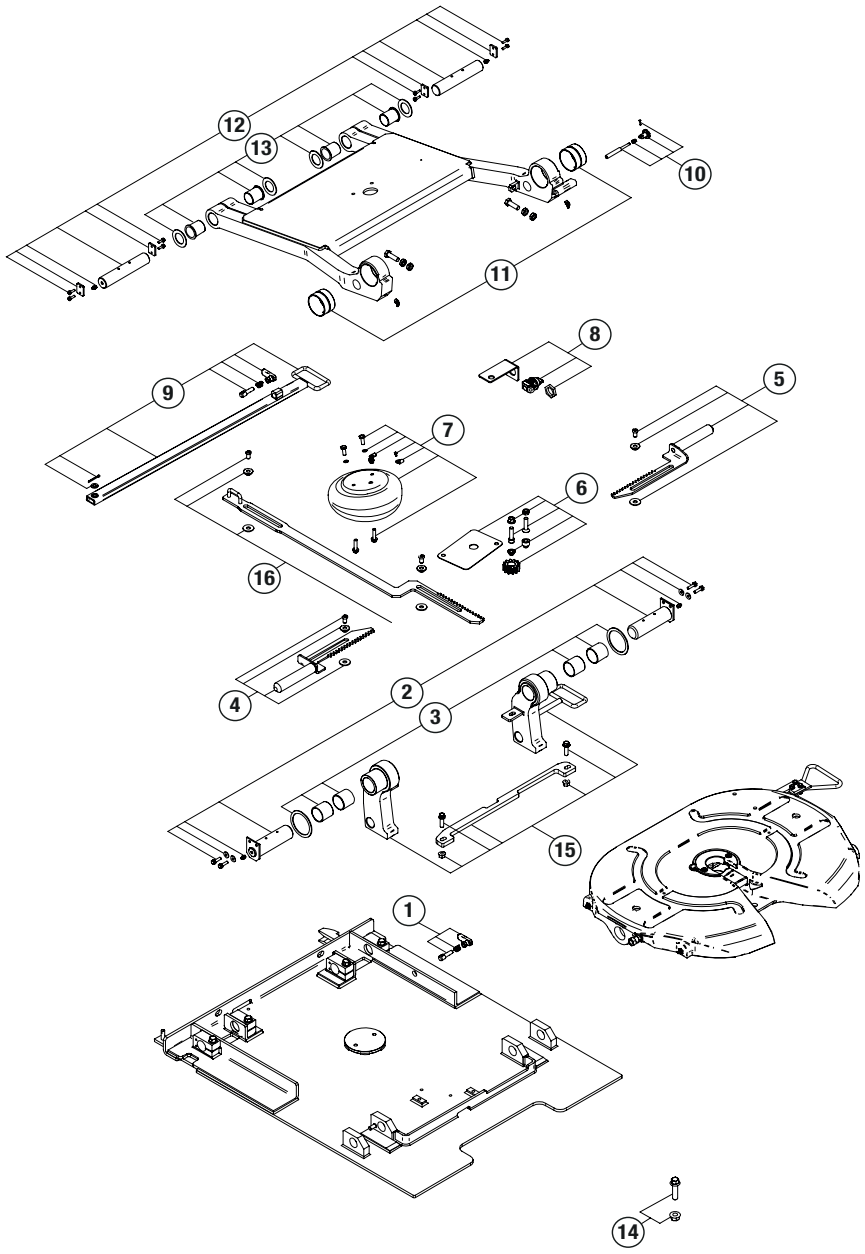

		Part number
1		T154 01 86
2		T154 01 87
3		T154 01 71
4		T154 01 72
5		T154 01 73
6		T154 01 74
7		T154 01 75
8		T154 01 76
9		T154 01 77
10		T154 01 78
11		T154 01 79
12		T154 01 80
13		T154 01 81
14	M14(1)	T154 01 82
14	M16(1)	T154 01 83
14	M14(1)	T154 01 84
14	M20(1)	T154 01 85
15	H 267	T154 01 88
15	H 317	T154 01 89
15	H 367	T154 01 90
16		T154 01 91

CREATE YOUR PART NUMBER

T33 XX YY Z

XX = FIFTH WHEEL TOP PLATE YY = MOUNTING LAYOUT Z = LIFT

E.G.: T33 00 03 1

Fifth wheel top plate XX
00 = greased

Mounting layout YY	Drilling (mm)	Lift (mm) Z
00 = undrilled		1=100
01 = Daimler Truck	12 x Ø21	2=150
02 = Iveco	16 x Ø17	3=200
03 = Scania	12 x Ø19	
04 = Volvo Trucks	20 x Ø15	
05 = Man	16 x Ø17	
06 = Renault Trucks		
07 = Daf		
08 = Daimler Actros 4	12 x Ø21	

2” FIFTH WHEEL
STANDARD SLIDER

APPROVED R55

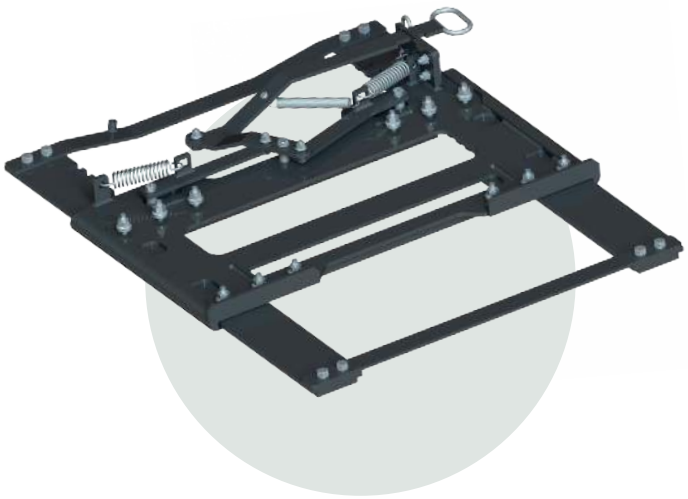



FOR 2” FIFTH WHEELS **ONLY** WITH ARTICULATED BASE AS BELOW **(1)**

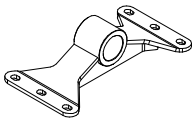

DESCRIPTION

- Sliding system with manual rack locking
- Fifth wheel offset over a max. travel of 525 mm in 37.5 mm steps
- Overall height 86 mm
- Allows a vertical load (U) of up to 20 T on the kingpin
- Optional:
  - Pneumatic opening kit (T1540215)
  - Pre-drilled bracket with slotted holes for adapting to the tractor chassis

Part number	T350 00 00(1)	T350 10 00
Type	FSL	
D (kN)	152	
Vertical load U (T)	20	
Weight (kg)	120	126
Width with corner plates(2) (mm)	780-900	930
Dim. (mm)	1 250 x 960	1 250 x 1 060
Class	J	

(2) not supplied

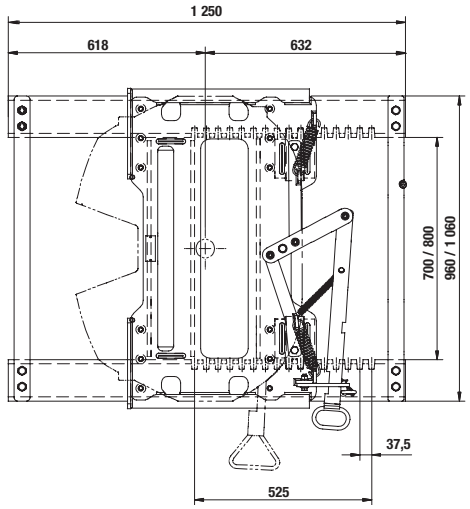

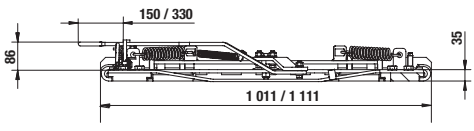

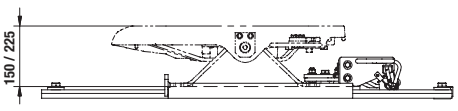

SPARE PARTS

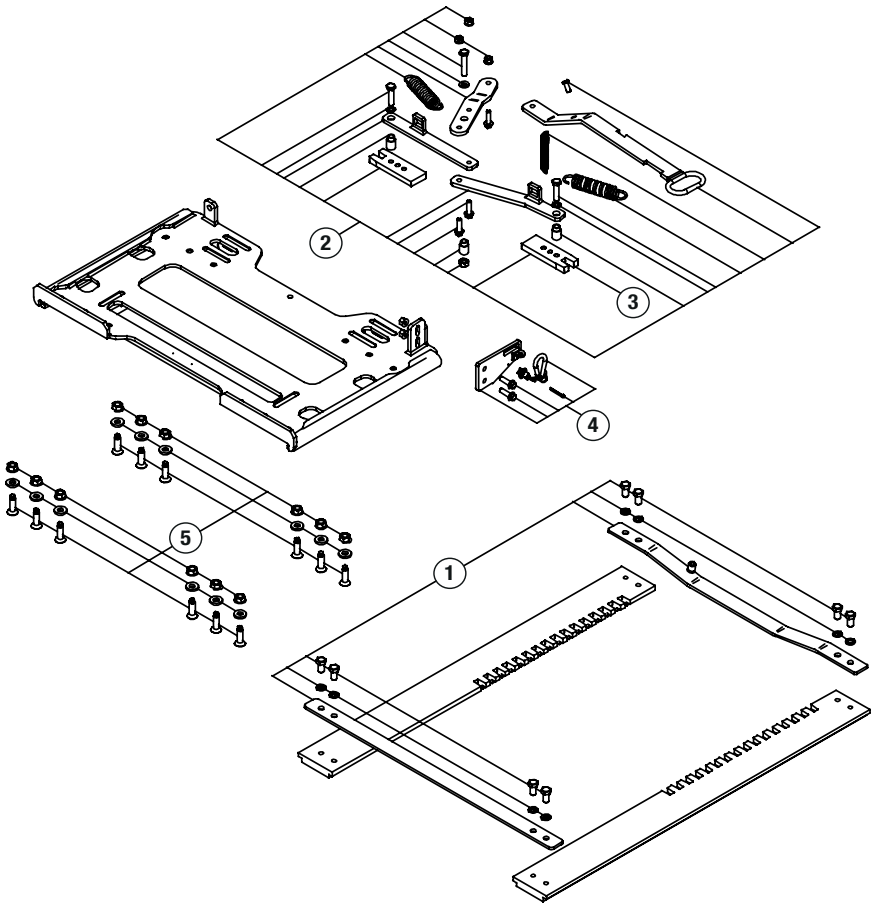

	T350 00 00	T350 10 00
1	T154 02 04	T154 02 05
2	T154 02 06	
3	T154 02 07	
4	T154 02 08	
5	T154 02 09	
6	T154 02 15	

PNEUMATIC OPENING KIT

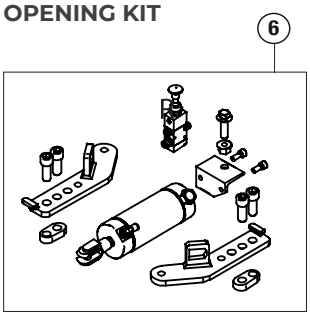

CREATE YOUR PART NUMBER

T35 AA BB C

AA = CHASSIS WIDTH BB = MOUNTING LAYOUT C = OPENING TYPE

E.G.: T35 00 03 1

AA - Chassis width (mm)
00 = 780 - 900
01 = 930

BB - Mounting layout	Drilling (mm)
00 = undrilled	
01 = Daimler Truck	12 x Ø22
02 = Iveco	12 x Ø18
03 = Scania	12 x Ø20
04 = Volvo Trucks	12 x Ø15,5
05 = Man	12 x Ø18
06 = Renault Trucks	12 x Ø15,5
07 = Daf	12 x Ø16
08 = Daimler Actros 4	12 x Ø22

C - Opening type
0 = manual
1 = pneumatic

2” FIFTH WHEEL
SLIDER FOR EXCEPTIONAL LOADS

APPROVED R55

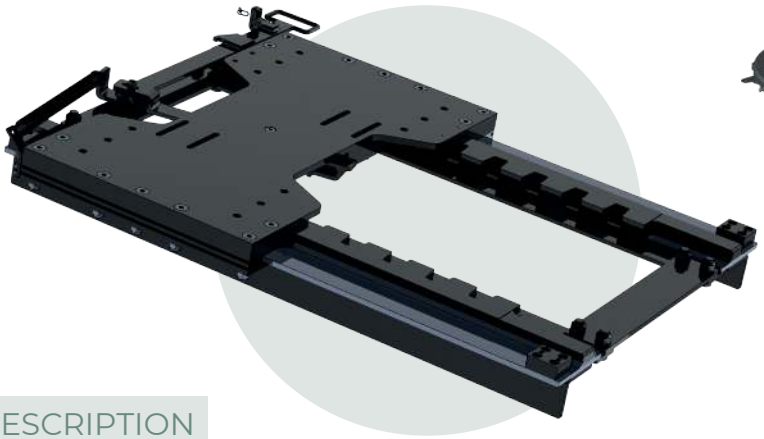



FOR 2”
FIFTH WHEELS



FOR 3.5”
FIFTH WHEELS



FOR DOUBLE OSCILLATION
FIFTH WHEELS

DESCRIPTION

- Sliding system with manual rack locking

- Max. travel of 525 mm in 37.5 mm steps
- Multi-fifth-wheel drawer possible: 1 x 2-inch drawer and 1 x 3.5-inch drawer
- Overall height 86 mm
- Allows a vertical load (U) of up to 20 T on the kingpin
- Optional:
  - Pneumatic opening kit
  - Pre-drilled bracket with slotted holes for adapting to the tractor chassis

Part number	T375 00 00(2)	T375 10 00
Type	SHD	
D (kN)	260	
Vertical load U (T)	40	
Weight (kg)	349	313
Chassis width (mm)	756-810	840-865
Class	J	

(2) only compatible with articulated bracket

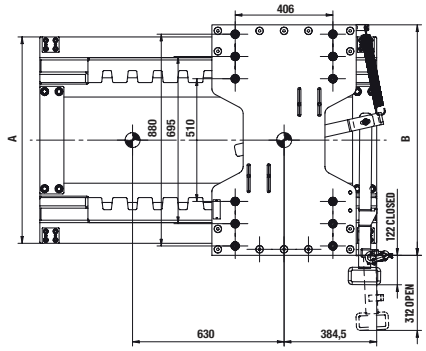

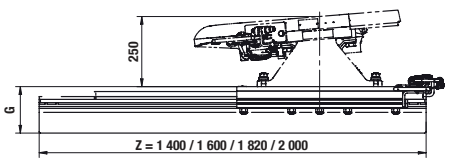

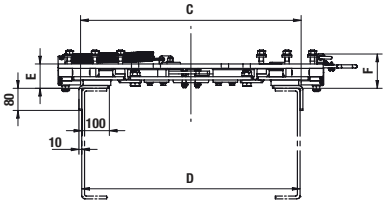

PNEUMATIC OPTION

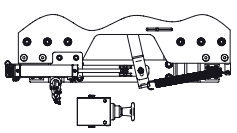

Part number	A (mm)	B (mm)	C (mm)	D (mm)	E (mm)	F (mm)	G (mm)
T375 00 00	Min. 858 Max. 912	Min. 958 Max. 1 012	798	Min. 756 Max. 810	88	124	168
T375 10 00	Min. 944 Max. 969	Min. 1 044 Max. 1 069	892	Min. 840 Max. 865	68	104	148

SPARE PARTS

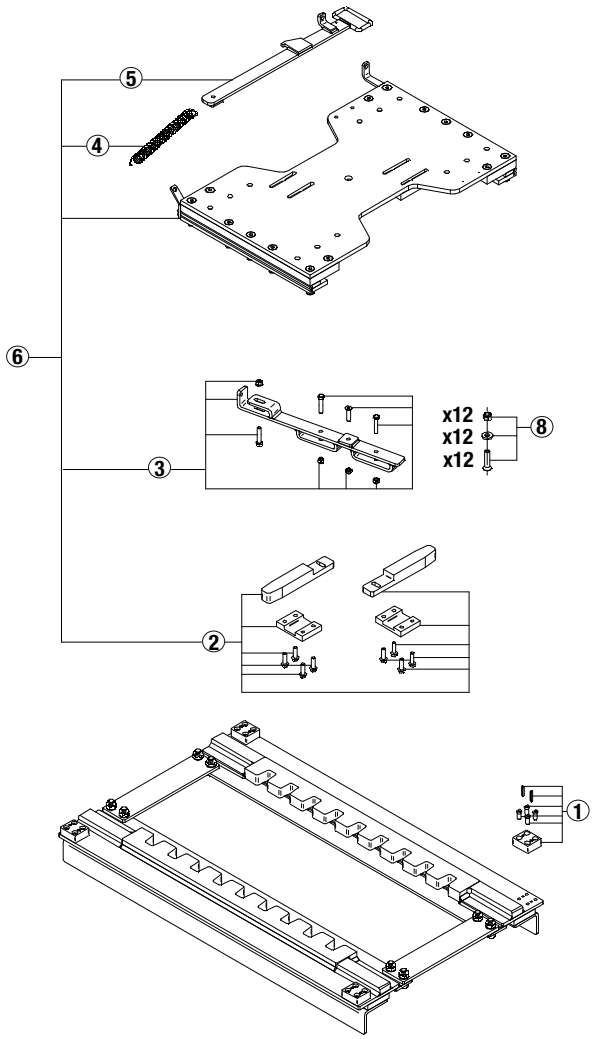

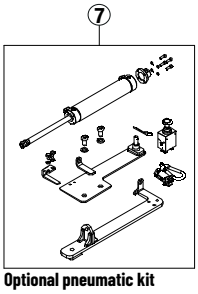

Optional pneumatic kit

	T375 00 00	T375 10 00	T375 00 1Z	T375 10 1Z
1	T154 03 03			
2	T154 03 04	T154 03 05	T154 03 04	T154 03 05
3	T154 03 06			
4	T154 03 07			
5	T154 03 08	T154 03 09	T154 03 10	
6	T154 03 30	T154 03 23	T154 03 24	T154 03 28
7			T154 03 15	T154 03 00
8 (1)	T154 03 02			

(1) not supplied

CREATE YOUR PART NUMBER

T37 WW X Y Z

WW = WIDTH X = REINFORCING CORNER PLATE Y = OPENING Z = LENGTH

E.G.: T37 51 0 1 9

Width (mm) WW
50 = narrow 756 - 810
51 = wide 840 - 865

Reinforcing corner plate X
0 = included
1 = not supplied

Opening Y
0=manual
1=pneumatic

Total length (mm) Z	Working travel (mm)
0 = 1 400	630
1 = 1 610	840
L = 1 820	1 050
2 = 2 000	1 260
3 = 2 240	1 470
4 = 2 450	1 680
5 = 2 660	1 980
6 = 2 810	2 100
7 = 2 975	2 205
8 = 3 185	2 415
9 =3 195	2 625

Document with non-contractual images and technical data, subject to change without notice.
Errors and omissions excepted.
Photos & illustrations TRAXION, V. Orlandi, WAP Fahrzeugtechnik. Registered logos and trademarks.
All rights reserved. Any reproduction, even partial, is prohibited without the prior written permission of TRAXION.
Printed in France. © TRAXION 10/2026.

www.traxion.fr

La FRENCH FAB

FFC Equipment & Vehicles
Partners in a sustainable industry





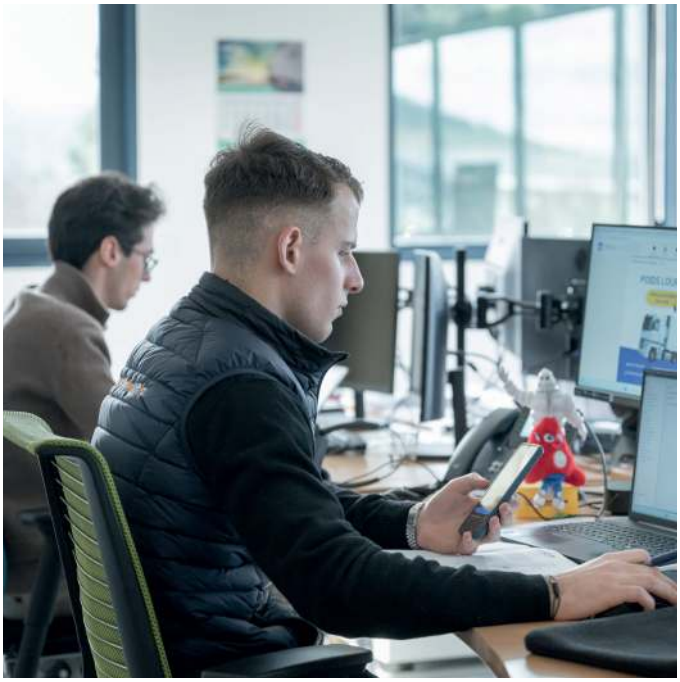


Traxion
SAFETY FOR MOBILITY



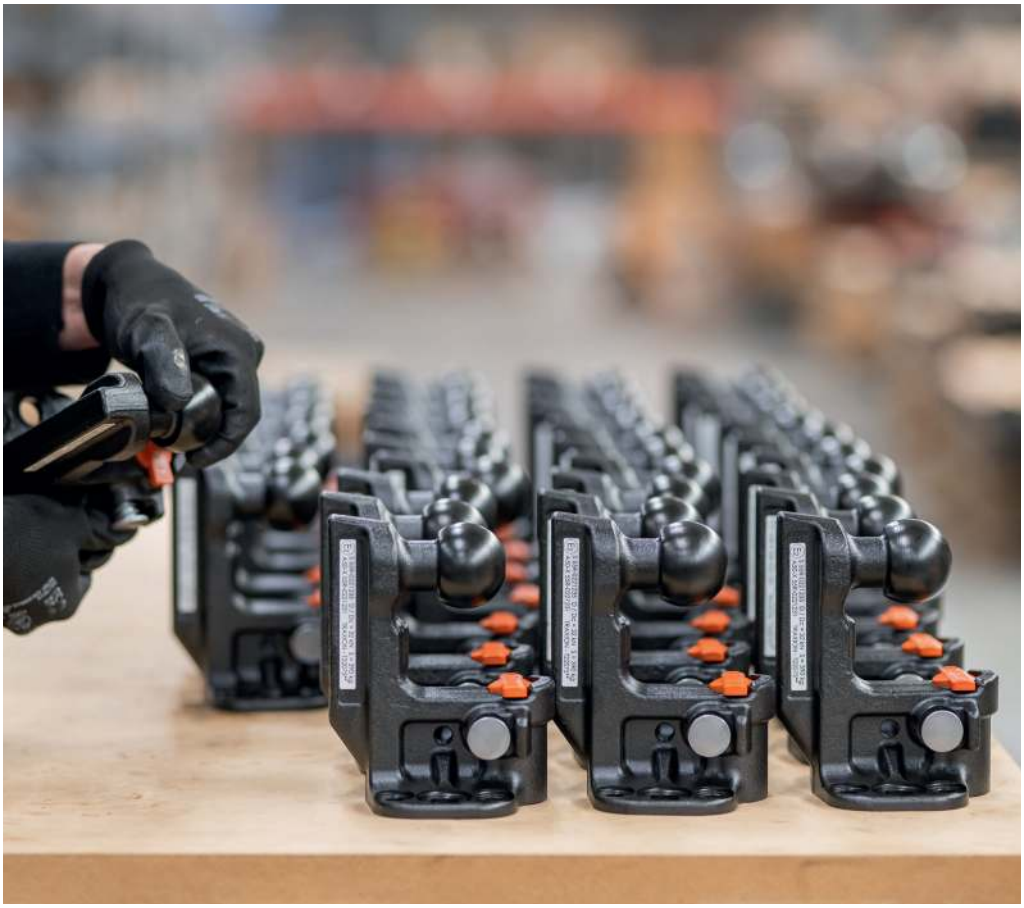




Traxion
Blueflex

Traxion®

SAFETY FOR MOBILITY

18 Chemin de la Plaine
FR-69390 Vourles

+33 (0)474 72 1000

www.traxion.fr

Photo credits: © TRAXION - RCS 537 727 372 Lyon | Design: Les Juliets - RCS Lyon 839 412 152
Document with non-contractual images and technical data, subject to change without notice | Do not litter | 10/2026 | T5992436